Chapter 5. REDOX REACTIONS AND ELECTROCHEMISTRY

5.1 INTRODUCTION

When introducing the topic of oxidation-reduction (redox) reactions it might be appropriate to compare redox reactions with reactions that are a bit more familiar - acid-base reactions. The distinguishing characteristic of an acid-base reaction is the *sharing* of electron *pairs*.

$$H{:}Cl + H_2O{:} \rightarrow H_2O{:}H^+ + {:}Cl^-$$

The analogous distinguishing characteristic of a redox reaction is the *transfer* of *one* or *more* electrons from one reactant to another.

$$Fe^{2+} + Ce^{4+} \rightarrow Fe^{3+} + Ce^{3+}$$

In the above reaction one electron is completely transferred from Fe(II) to Ce(IV). In acid-base reactions the reactants are designated as acid-base conjugate pairs.

H_3O^+/H_2O	and	HCl/Cl^-
acid/base		acid/base

In redox reactions the overall reaction is broken into two half reactions, each of which involves a redox couple, which is analogous to the acid-base conjugate pair. Each half reaction and each couple involves the same element in different oxidation states.

Fe^{3+}/Fe^{2+}	$Fe^{2+} \rightarrow Fe^{3+} + e^-$
Ce^{4+}/Ce^{3+}	$Ce^{4+} + e^- \rightarrow Ce^{3+}$

Every redox reaction can be broken into two half reactions, just as above for the case of iron and cerium.

Balancing redox reactions is somewhat more complicated than balancing other types of reactions and several methods exist for this purpose. The one recommended for use with this text is the half reaction method. It is assumed that the reader is already familiar with this topic from past experience with chemistry. The details of this method are presented in Appendix A and should be consulted if the need arises.

5.1.1 ELECTROCHEMICAL CELLS

The ability to transfer electrons makes redox reactions useful in a unique way. To demonstrate this, again consider the simple redox reaction discussed above.

$$Fe^{2+} + Ce^{4+} \rightarrow Fe^{3+} + Ce^{3+}$$

If Fe(II) and Ce(IV) are mixed directly the electron transfer occurs in solution when the reactants collide with each other and the energy of reaction causes the solution to change temperature (the chemical energy is dissipated as heat). However, by placing the reactants in an *electrochemical cell* the electron transfer can be made to occur in a different fashion and the energy of the reaction can be used externally. The electrochemical cell is diagrammed in Figure 5-1. For obvious reasons, this type of cell is often referred to as an “H” cell.

In this cell (or battery) the Ce(IV) does not directly react with the Fe(II). The mechanism of operation is as follows:

1) Fe(II) ions contact the right Pt electrode, give up electrons, and go away as Fe(III).

2) The electrons move through the wire connecting the right and left Pt electrodes and become available at the left electrode.

3) Ce(IV) ions contact the left Pt electrode, pick up electrons, and go away as Ce(III).

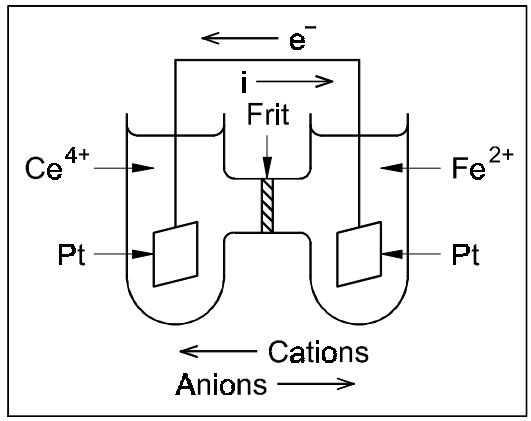

Figure 5-1

Right electrode	$Fe^{2+} \rightarrow Fe^{3+} + e^-$
Left electrode	$Ce^{4+} + e^- \rightarrow Ce^{3+}$
Total reaction	$Fe^{2+} + Ce^{4+} \rightarrow Fe^{3+} + Ce^{3+}$

The overall result is exactly the same as if the two solutions were mixed directly. However, each half reaction occurs in its own compartment and at separate electrodes. The electrodes' function is simply to act as locations where electrons can be donated to or taken from reactants in solution. The redox reactions occur *only* at the electrode surfaces.

For the cell shown in Figure 5-1, and for many similar cells, the possibility that the electrodes can be attacked and destroyed by cell reagents exists. For this reason such electrodes are often made from inert metals such as platinum or gold. The frit prevents direct mixing of the solutions in the two compartments. If such mixing occurred, the redox reaction would proceed directly and the cell would be drained. A *liquid junction*, the junction of two dissimilar solutions, is found at the frit. The frit must be porous to some extent to allow ions to pass through. In solution ions carry charge (just as electrons carry charge in a wire) and if ions were entirely prevented from crossing between compartments, charge would quickly build up at both electrodes, preventing further reaction. Electroneutrality (the absence of any net charge) applies to all parts of the cell.

Two definitions will now be presented. An oxidation occurs at the right electrode in the cell shown in Figure 5-1.

$$Fe^{2+} \rightarrow Fe^{3+} + e^-$$

The electrode at which oxidation takes place is always the *ANODE*.

A reduction must occur at the left electrode.

$$Ce^{4+} + e^- \rightarrow Ce^{3+}$$

The electrode at which reduction occurs is always the *CATHODE*.

Note that since electrons move from negative to positive, the *anode* is *negative* with respect to the *cathode*. This is the case for all *Galvanic cells* or batteries. These are cells that convert chemical energy into electrical energy. This is not true in the reverse case (for a cell in which electrical energy is converted to chemical energy). In this text only Galvanic cells will be discussed. In most devices studied in science, *e.g.* gas discharge tubes, the negative electrode is always the cathode. For *Galvanic cells* the *cathode* is

always the *positive* electrode and the *anode* is always the *negative* electrode. The definitions of anode and cathode given above apply regardless of the type of cell being discussed.

In the cell of Figure 5-1 it would make no sense to connect the external wire directly from the anode to the cathode as shown. If this were done, the electron flow would still do no useful work outside the cell and all the chemical energy would appear as heat in the cell. Instead one would normally place a lamp, motor, or similar device in the circuit, as shown in Figure 5-2. Now the electron flow would do useful work external to the cell.

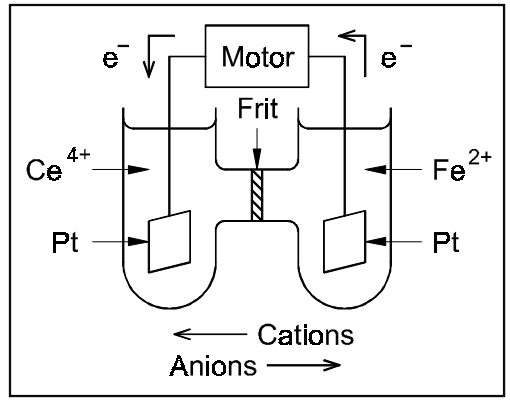

Figure 5-2

5.1.2 THE NERNST EQUATION

Batteries, fuel cells, solar cells, *etc*., although quite interesting in their own right, are not topics normally encountered in analytical chemistry. This branch of chemistry concerns itself with determining the amounts of materials present in solutions. One might suspect that certain cell parameters such as voltage or current might be related to the concentrations and types of materials present in the cell. Such relationships do exist. Before discussing one such relationship, it should be noted that several names are used for the force that causes electrons to move (the electromotive force or EMF). The two most common names are *voltage* and *potential*. Potential is actually an abbreviation for *potential difference*. The preferred term is voltage, but traditionally cell voltages have been called potentials and standard cell voltages (see below) are always referred to as standard potentials. In this text "voltage" and "potential" will both be used to denote EMF, but "potential" will only be used with regard to standard potentials and liquid junction potentials.

The relationship between cell voltage and cell contents is obtained as follows: ΔG, the change in free energy, is the maximum work (or energy) available from a chemical reaction. Electrical work (or energy) is equal to Eq, where q is the charge undergoing a change in voltage, E, assumed constant in this case. If it is also assumed that all the chemical energy is converted to electrical energy, then

$$\Delta G = \mathrm{E}q \qquad (5\text{-}1)$$

where ΔG is the free energy change involved in the cell reaction as written, E is the cell voltage, and q is the charge passed through the cell in causing the reaction to occur. However, $q = nF$, where n is the number of moles of electrons transferred in the reaction as written and F is the Faraday constant, 9.6487×10^4 coulombs per mole of electrons. It is necessary to use the conversion factor, F, since chemists always work in moles of reagents, including electrons, whereas all other work with electrons is done in coulombs. Therefore

$$\Delta G = nF\mathrm{E} \qquad (5\text{-}2)$$

However, at this point a convention raises its ugly head. By convention ΔG is always negative for a reaction that is spontaneous, and by convention the cell voltage, E, is always positive for a spontaneous cell reaction. To reconcile these two conventions, the relationship must thus be

$$\Delta G = -nF\mathrm{E} \qquad (5\text{-}3)$$

If all cell reactants are in their standard states, then Eqn. (5-3) becomes

$$\Delta G° = -nFE° \tag{5-4}$$

E° is simply the cell voltage when all materials in the cell are in their standard states; it is always referred to as the standard potential. The thermodynamic relationship

$$\Delta G = \Delta G° + RT\ln Q \tag{5-5}$$

is now introduced, where R is the gas constant (8.3143 J/mol·K), T is the absolute temperature, and Q is the reaction quotient. Remember that one joule = one volt·coulomb. Thus in electrochemistry it is convenient to use the units V·coul/mol·K for the gas constant. After combining the above three equations

$$-nFE = -nFE° + RT\ln Q \tag{5-6}$$

or

$$E_{cell} = E°_{cell} - \left(\frac{RT}{nF}\right)\ln Q \tag{5-7}$$

This equation is referred to as the *Nernst equation* after the scientist who first derived it. It provides a relationship between the cell voltage and the activities of the materials in the cell. Strictly speaking this equation can only be applied to cells through which no current flows. The reason for this is that it was assumed in the derivation that the chemical energy could be equated to the electrical energy - or that the chemical energy was entirely converted to electrical energy. This is only true of a cell in which the current is zero. A bit more will be said about this later. For the general cell reaction

$$aA + bB \rightarrow cC + dD$$

where the half reactions are

$aA \rightarrow cC + ne^-$ (at the anode)

$bB + ne^- \rightarrow dD$ (at the cathode)

$$Q = \frac{(A_C)^c(A_D)^d}{(A_A)^a(A_B)^b} \tag{5-8}$$

$$E = E° - \left(\frac{RT}{nF}\right)\ln\frac{(A_C)^c(A_D)^d}{(A_A)^a(A_B)^b} \tag{5-9}$$

where A_A is the activity of reagent A, *etc*. The activity (usually called fugacity) of an ideal gas is equal to its partial pressure in atmospheres and the activity of a pure solid or liquid is unity. As usual it will be assumed that all gases are ideal and that for solutions the activity of the solvent is unity and the activities of solutes are equal to the concentrations. Thus, assuming that all reagents in this example are solutes, the Nernst equation becomes

$$E = E° - \left(\frac{RT}{nF}\right)\ln\frac{[C]^c[D]^d}{[A]^a[B]^b} \tag{5-10}$$

When the values of R and F are incorporated into Eqn. (5-10) the following results

$$E = E° - \left(\frac{8.617\times10^{-5}T}{n}\right)\ln\frac{[C]^c[D]^d}{[A]^a[B]^b} \tag{5-11}$$

The units of the constant in Eqn. (5-11) are (V·mol e^-)/(K·mol). Usually experiments are carried out at 25°C (298.15 K), in which case Eqn. (5-11) becomes

$$E = E° - \frac{(0.02569)}{n} \ln \frac{[C]^c[D]^d}{[A]^a[B]^b} \qquad (5\text{-}12)$$

Some individuals prefer to work with base 10 logarithms, in which case the Nernst equation becomes

$$E = E° - \left(\frac{0.05916}{n}\right) \log \frac{[C]^c[D]^d}{[A]^a[B]^b} \qquad (5\text{-}13)$$

In Eqns. (5-12) and (5-13) the units of the terms (0.02569/*n*) and (0.05916/*n*) are volts.

The secret of using the Nernst equation is to be very careful about making sure that the values placed in the equation are for the reaction *as written*. Remember the negative sign before the log term and that *n*, E° and *Q* (products divided by reactants) must be for the reaction as you have written it.

5.2 CALCULATION OF CELL VOLTAGES

5.2.1 TABLE OF STANDARD REDUCTION POTENTIALS

One of the obvious uses of the Nernst equation is in the calculation of cell voltages. To accomplish this one must know the concentrations in the cell, the cell half reactions, and the associated standard potentials. *Standard potentials* and *half reactions* are listed in tables just like values of ΔH, K_e, *etc*. Full cell reactions and full cell standard potentials (other than those involving the reference reaction, as explained below) are not listed in these tables. However, these can be calculated from the tables providing that both half reactions occurring in the cell are listed. To understand what the entries in the table mean and how to use the table, it is helpful to know how the table might have been assembled.

One can imagine that a table of *reduction potentials* was constructed in the following manner:

First, one particular half reaction (or redox couple) was chosen as a reference for all measurements. This was the reaction involving hydrogen gas and hydrogen ions at an inert platinum electrode:

$$H_2 \rightarrow 2H^+ + 2e^-$$

Second, the voltages of cells with all other half reactions in one half cell and the reference half reaction in the other half cell were measured and a table of these values was established.

For example, in the case of the half reaction involving metallic zinc and Zn(II), the cell shown in Figure 5-3 would be set up and its voltage measured. From this measurement one could then write:

$$Zn^{2+} + H_2 \rightarrow Zn(s) + 2H^+ \qquad E° = -0.763 \text{ V}$$

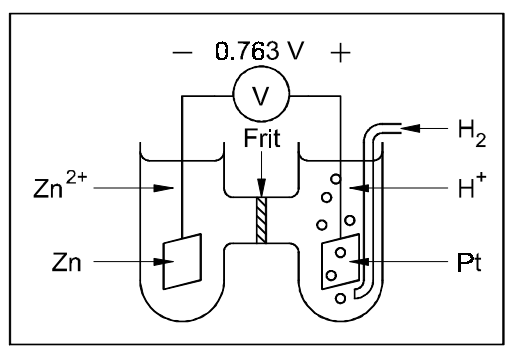

Figure 5-3

Several things need to be mentioned about this cell and this measurement. First, in order to measure E° directly, all substances in the cell must be in their standard states. This means that the pressure of hydrogen gas over the cell solution must be one atmosphere, which is readily arranged. The activity of metallic zinc is already unity, since it is a pure solid. The activity of zinc and hydrogen ions must also be unity. This is less easily arranged; however, it will be assumed that this has been done for the sake of the discussion. Second, the zinc electrode serves two purposes in this cell. Like all electrodes it acts as the place where electrons "enter and leave" the solution, the location for the redox reaction. It also acts as one of the cell reactants; it is not inert. Many

metals can serve such a dual role in electrochemistry. Third, in a table of *reduction potentials* the reference half reaction (that involving hydrogen) is always written as an oxidation and the other half reaction as a reduction, *regardless* of the direction which the reactions actually prefer to go. Fourth, the standard potential listed above has a negative sign because the reaction, written as shown, is non-spontaneous (the reaction is written "in reverse"). Remember that standard potentials, just like standard free energies, are thermodynamic quantities and they change sign when the direction of the reaction is reversed. Thus the reaction above could just as well have been written as:

$$Zn(s) + 2H^+ \rightarrow Zn^{2+} + H_2 \qquad E° = 0.763\ V$$

Whenever the direction of a reaction is reversed, *the sign of the standard potential must be changed*.

The above discussion leads one to conclude that all non-reference half reactions could have been listed as oxidations instead of reductions, in which case one would have prepared a table of standard oxidation potentials. In fact both types of tables have been used. Both reduction potential and oxidation potential tables contain exactly the same information, the signs of the standard potentials are different and the reactions are written in opposite directions. Reduction potential tables are more often used today because they possess one advantage - the sign of the half cell calculated using reduction potentials is the same as that measured in the laboratory using a voltmeter - see the example above involving the zinc electrode. More will be said about this later.

One entry has been made in the table of standard potentials. To make other entries the half cell on the left in Figure 5-3 would have to be changed. Assume that one wished to measure the standard potential for the reduction of Cr(III) to Cr(II) with hydrogen. One would replace the zinc electrode with a platinum electrode and fill the left half cell with a solution containing Cr(III) and Cr(II), each at unit activity. One would then measure the cell voltage as 0.41 V, the electrode on the left being negative. The following could then be written

$$Cr^{3+} + 1/2H_2 \rightarrow Cr^{2+} + H^+ \qquad E° = -0.41\ V$$

After several such measurements a small table like Table 5-1 below would be obtained:

Table 5-1

Reaction	E°(V)
$Zn^{2+} + \mathbf{H_2} \rightarrow Zn(s) + \mathbf{2H^+}$	-0.763
$Cr^{3+} + \mathbf{1/2H_2} \rightarrow Cr^{2+} + \mathbf{H^+}$	-0.41
$2H^+ + \mathbf{H_2} \rightarrow H_2 + \mathbf{2H^+}$	0.0000
$I_2 + \mathbf{H_2} \rightarrow 2I^- + \mathbf{2H^+}$	0.622
$Cr_2O_7^{2-} + 14H^+ + \mathbf{3H_2} \rightarrow 2Cr^{3+} + 7H_2O + \mathbf{6H^+}$	1.33

The reference reaction above is shown in bold faced type. Often individuals feel that there is something "magic" about the half reaction involving hydrogen gas and hydrogen ion since it has a standard potential of exactly 0.000 V. It should be obvious from the above table that this only occurs because that reaction was chosen as the reference reaction. Obviously any cell which contains the same reagents in both half cells must have a voltage of zero volts. If any other half reaction had been chosen as the reference (as would be likely if the table were being prepared today), that half reaction would have had a potential of zero in the tables and the reaction involving hydrogen would not. Thus the numbers in the above table are all relative to hydrogen as the reference half reaction and would change if the

reference half reaction were changed. *However, the differences between standard potentials would be the same, regardless of the reference half reaction chosen*.

Since the reference half reaction is the same for all reactions in the table, it is never listed in the table. Thus Table 5-1 above would appear as Table 5-2 below:

Table 5-2

Reaction	E°(V)
$Zn^{2+} + 2e^- \rightarrow Zn(s)$	-0.763 V
$Cr^{3+} + e^- \rightarrow Cr^{2+}$	-0.41
$2H^+ + 2e^- \rightarrow H_2$	0.0000
$I_2 + 2e^- \rightarrow 2I^-$	0.622
$Cr_2O_7^{2-} + 14H^+ + 6e^- \rightarrow 2Cr^{3+} + 7H_2O$	1.33

The appearance of the table written as half reactions leads some to believe that it is possible to measure the absolute voltage of a half reaction or a single electrode. This is not the case. *It is not possible to measure the absolute voltage of a half reaction or a single electrode*. The voltages above are those measured relative to the half reaction involving hydrogen gas and hydrogen ion - the reference reaction has been omitted for simplicity.

5.2.2 USE OF THE TABLE TO CALCULATE STANDARD POTENTIALS

How does one obtain the standard potential for a reaction not directly listed in the table? In effect one uses the two reactions in the table involving the materials of interest and cancels the reference reaction (remember that all reactions in the table include the reference half reaction), in much the same way one does enthalpy calculations. Say that you wish the standard potential for the reaction in which iodide ion is oxidized by dichromate ion to produce iodine and chromium(III) ion, shown below in an unbalanced format (this will be balanced later).

$$I^- + Cr_2O_7^{2-} \rightarrow Cr(III) + I_2$$

Step 1. Locate the two half reactions (see Table 5-2) involving the materials of interest.

$I_2 + 2e^- \rightarrow 2I^-$ E° = 0.622 V

$Cr_2O_7^{2-} + 14H^+ + 6e^- \rightarrow 2Cr^{3+} + 7H_2O$ 1.33 V

Step 2. Reverse the direction of the reaction with the least positive standard potential and change the sign of that standard potential. One of the two reactions must be reversed (one must be an oxidation, the other a reduction), and reversing the least positive one will guarantee that the calculated standard potential will be positive. Thus the reaction will proceed as written *under standard conditions*.

$2I^- \rightarrow I_2 + 2e^-$ E° = -0.622 V

$Cr_2O_7^{2-} + 14H^+ + 6e^- \rightarrow 2Cr^{3+} + 7H_2O$ 1.33 V

Step 3. Multiply the half reactions appropriately by integers to make the number of electrons in both reactions equal. *DO NOT MULTIPLY THE STANDARD POTENTIALS!* Add the half reactions, cancelling the electrons, to get the full, balanced redox reaction. Add the standard potentials to get the standard potential for the new redox reaction.

$$6I^- \rightarrow 3I_2 + 6e^- \qquad E° = -0.622\ V$$

$$Cr_2O_7^{2-} + 14H^+ + 6e^- \rightarrow 2Cr^{3+} + 7H_2O \qquad 1.33\ V$$

$$Cr_2O_7^{2-} + 14H^+ + 6I^- \rightarrow 2Cr^{3+} + 7H_2O + 3I_2 \qquad +0.71\ V$$

The electrons *must* cancel in the above procedure. This in effect cancels the reference reaction. If the full reactions had been written for the above procedure rather than the half reactions, it can readily be seen how the reference reaction cancels.

$$6I^- + \mathbf{6H^+} \rightarrow 3I_2 + \mathbf{3H_2} \qquad E° = -0.622\ V$$

$$Cr_2O_7^{2-} + 14H^+ + \mathbf{3H_2} \rightarrow 2Cr^{3+} + 7H_2O + \mathbf{6H^+} \qquad 1.33\ V$$

$$Cr_2O_7^{2-} + 14H^+ + 6I^- \rightarrow 2Cr^{3+} + 7H_2O + 3I_2 \qquad +0.71\ V$$

What is the standard potential for the reaction involved in the lead acid storage battery? This involves the reduction of lead dioxide to lead sulfate and the oxidation of lead metal to lead sulfate. The table of standard reduction potentials lists

$$PbSO_4(s) + 2e^- \rightarrow Pb(s) + SO_4^{2-} \qquad E° = -0.355\ V$$

$$PbO_2(s) + SO_4^{2-} + 4H^+ + 2e^- \rightarrow PbSO_4(s) + 2H_2O \qquad +1.685\ V$$

Reverse the reaction with the most negative standard potential and change the sign of E°.

$$Pb(s) + SO_4^{2-} \rightarrow PbSO_4(s) + 2e^- \qquad E° = +0.355\ V$$

$$PbO_2(s) + SO_4^{2-} + 4H^+ + 2e^- \rightarrow PbSO_4(s) + 2H_2O \qquad +1.685\ V$$

Since the number of electrons is the same in both equations above, these reactions and the standard potentials can be directly added to get the final result.

$$Pb(s) + PbO_2(s) + 2SO_4^{2-} + 4H^+ \rightarrow 2PbSO_4(s) + 2H_2O \qquad +2.020\ V$$

Once the standard potential for the redox reaction of interest has been determined, it can be used to calculate any cell voltage involving that reaction using the Nernst equation and the concentrations of the cell reagents. This is fairly straight forward; however, it is not the method preferred by most analytical chemists for reasons to be explained later. An example of this method is given in Appendix A for those interested.

Before explaining how to calculate cell voltages, it should be noted that two half reactions can be added to obtain a third *half reaction*. In the examples above two half reactions were added to obtain a fully balanced complete redox reaction in which the electrons (or reference reaction) were completely cancelled. When a third half reaction results, the electrons (or reference reaction) do not completely cancel. In this case the standard potentials *are not directly additive*. In all cases, however, the standard free energies are directly additive. Recall that $\Delta G° = -nFE°$, Eqn. (5-4).

By way of example, say that you needed the standard potential for the following half reaction:

$$Fe^{3+} + 3e^- \rightarrow Fe(s)$$

You have the following data:

$$Fe^{3+} + e^- \rightarrow Fe^{2+} \qquad E° = 0.771\ V$$

$$Fe^{2+} + 2e^- \rightarrow Fe(s) \qquad E° = -0.440\ V$$

You realize that the desired half reaction results from direct addition of these two half reactions, but the standard potentials are not additive. Convert the standard potentials to free energies and add them:

$$Fe^{3+} + e^- \rightarrow Fe^{2+} \qquad \Delta G° = -nFE° = -(1)(96490\ coul/mol)(0.771\ V) = -7.439x10^4\ J/mol$$

$$Fe^{2+} + 2e^- \rightarrow Fe(s) \qquad \Delta G° = -(2)(96490\ coul/mol)(-0.441\ V) = 8.491x10^4\ J/mol$$

$$Fe^{3+} + 3e^- \rightarrow Fe(s) \qquad \Delta G° = 1.052x10^4\ J/mol$$

Now calculate the desired standard potential.

$$E° = -\Delta G°/nF = (-1.052x10^4\ V{\cdot}coul/mol)/(3)(96490\ coul/mol) = -0.036\ V$$

Thus the final result would be written as follows:

$$Fe^{3+} + 3e^- \rightarrow Fe(s) \qquad E° = -0.036\ V$$

It should be apparent from the discussion above that the only reason that standard potentials are directly additive in the case where two half reactions add to form a completely balanced full redox reaction is that the value of *nF* is the same for all the reactions involved (the two half reactions and the full reaction) and therefore it can be omitted from the calculation. Including it makes no difference in the final result and complicates the calculation.

5.2.3 REFERENCE ELECTRODES

In almost all electrochemical measurements in analytical chemistry, one of the two cell electrodes is a *reference electrode*. A reference electrode is one in which the reagent concentrations are constant and the voltage is very stable. Thus a reference electrode contributes a constant amount to the total cell voltage. The other electrode, usually called the *test* or *working* electrode, is the electrode at which some reaction of interest occurs. Any change in the contribution of the reference electrode to the total cell voltage would confuse the measurement; thus it is desirable to have reference electrodes as stable as possible.

One reference electrode has already been discussed, the *standard* hydrogen electrode (SHE). This was the electrode used in the creation of the standard potential tables, the electrode against which all other half reactions were measured. This is not a convenient electrode to use for everyday measurements since it requires a source of hydrogen gas and it is not as stable as some other reference electrodes. Two very popular reference electrodes are the calomel electrode and the silver chloride electrode.

The calomel electrode uses mercury as the electrode metal. In contact with the mercury is a coating of insoluble mercury(I) chloride (Hg_2Cl_2). The common name for mercury(I) chloride is calomel. The electrolyte is usually KCl, although NaCl is sometimes used. This electrode (or half cell) is shown in Figure 5-4. The half reaction which occurs at this electrode is

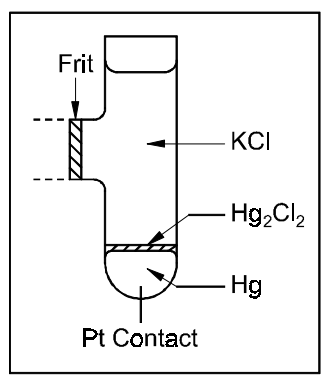

Figure 5-4

$$Hg_2Cl_2(s) + 2e^- \rightarrow 2Hg(l) + 2Cl^-$$

The activities of mercury and calomel are both unity (constant) and the concentration of chloride ion is usually made fairly high and also constant. The voltage of this electrode is very stable. Often the electrolyte is saturated with KCl (~4M KCl). In this case the electrode is called the *saturated* calomel electrode (SCE). NOTE, it is not the *standard* calomel electrode; there is no such electrode.

The silver chloride electrode is very similar to the calomel electrode. The electrode metal is silver, coated with insoluble silver chloride. The electrolyte is again either KCl (usually) or NaCl. This electrode is shown in Figure 5-5. The half reaction at this electrode is

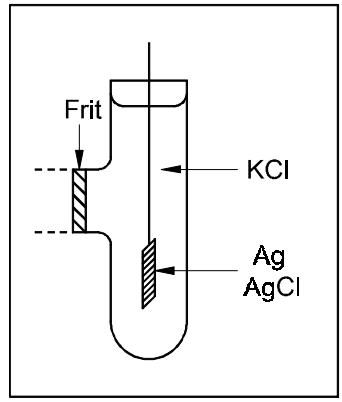

Figure 5-5

$$AgCl(s) + e^- \rightarrow Ag(s) + Cl^-$$

This electrode is stable for the same reasons as the calomel electrode and is somewhat easier to construct since it does not involve a liquid metal.

5.3 HALF CELL METHOD OF VOLTAGE CALCULATION

Cell voltages can be calculated using $E°_{cell}$ and the full Nernst equation. However, in analytical chemistry another method is used almost exclusively - the method of half cells. In the types of calculations done in analytical chemistry the half cell method is simpler. However, both methods give exactly the same results.

The steps involved in the calculation of cell voltages using the method of half cells is as follows:

Step 1. Calculate the voltage of each of the electrodes in your cell *vs* an "imaginary" standard hydrogen electrode (SHE). This must be done assuming that a reduction takes place at both cell electrodes. Thus you use the reduction potentials and half reactions *just as they are listed in the reduction potential tables*. When calculated this way, the sign of the calculated value is the same as the sign of the voltage of the actual electrode *vs* the SHE. The electrode that is the anode or the cathode in the actual cell is easily determined later.

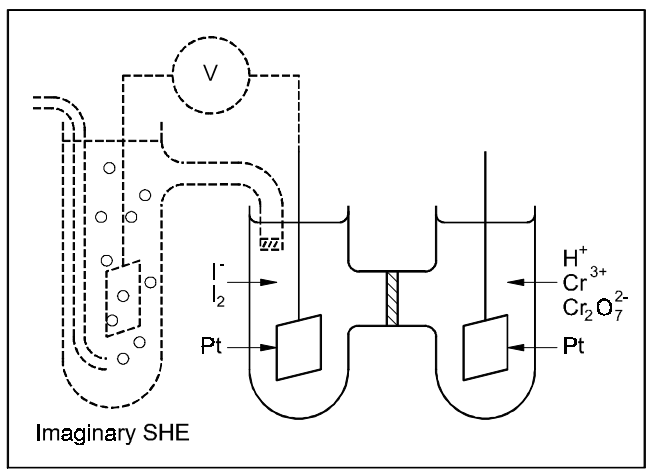

Figure 5-6

As an example, take a cell which has $[I^-] = 0.100$ M and $[I_2] = 0.0100$ M in one compartment, and $[Cr(III)] = 0.0100$ M, $[Cr_2O_7^{2-}] = 0.0100$ M, and $[H^+] = 0.100$ M in the other. This cell is diagrammed in Figure 5-6. Select the half reactions which involve the reactants which are of interest. For the calculation of the voltage of the cell involving the electrode at which iodine reacts (the left electrode) and the SHE (the measurement shown in Figure 5-6),

$$I_2 + H_2 \rightarrow 2I^- + 2H^+ \qquad E° = 0.622 \text{ V}$$

The standard potential is used directly as listed in the table since all reactions, listed as half reactions in the table, are *versus* the SHE and the reaction of iodine is treated as a reduction. Thus

$$E_{left} = 0.622V - \frac{0.0592V}{2}\log\frac{[I^-]^2[H^+]^2}{[I_2]P_H} \tag{5-14}$$

However, since both hydrogen ion and hydrogen gas are present in their standard states (unit activity) in the SHE, one can write

$$E_{left} = 0.622V - \frac{0.0592V}{2}\log\frac{[I^-]^2}{[I_2]} \tag{5-15}$$

Note that this could have been written directly from the data in the table. This is how it would normally be done.

$$I_2 + 2e^- \rightarrow 2I^- \qquad E° = 0.622\ V$$

$$E_{left} = 0.622V - \frac{0.0592V}{2}\log\frac{[I^-]^2}{[I_2]} \tag{5-15}$$

$$E_{left} = 0.622V - (0.0296V)\log\frac{(0.100)^2}{(0.0100)} = 0.622V \tag{5-16}$$

For the calculation involving the electrode at which chromium reacts (the right electrode in Figure 5-6),

$$Cr_2O_7^{2-} + 14H^+ + 6e^- \rightarrow 2Cr^{3+} + 7H_2O \qquad E° = 1.33\ V$$

$$E_{right} = 1.33V - \frac{0.0592V}{6}\log\frac{[Cr^{3+}]^2}{[Cr_2O_7^{2-}][H^+]^{14}} \tag{5-17}$$

$$E_{right} = 1.33V - 0.00993V\log\frac{(0.0100)^2}{(0.0100)(0.100)^{14}} \tag{5-18}$$

$$E_{right} = 1.33V - (0.00993V)\log 10^{12} = 1.21V \tag{5-19}$$

Step 2. Use these two voltages, which are the voltages of the two cell electrodes *vs* the SHE, to calculate the actual cell voltage. One can often do this in one's head, but until you are sure of yourself in this, using a scale is often very convenient. On this scale the SHE is always zero volts. Simply place the other electrodes on the scale and it will be obvious how to calculate the cell voltage.

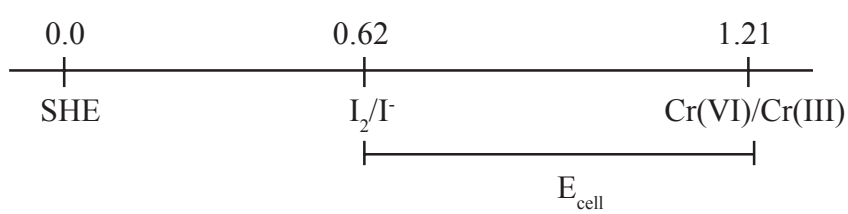

$$E_{cell} = 1.21\ V - 0.62\ V = 0.59\ V \tag{5-20}$$

Step 3 (if necessary). From the voltages or the scale it is obvious that the electrode at which chromium reacts is the positive electrode in the cell and is therefore the cathode. The electrode at which iodine reacts must be the anode. Thus iodide ion must be oxidized to iodine and dichromate ion must be reduced to chromium(III) ion. Thus the cell reaction must be

$$Cr_2O_7^{2-} + 14H^+ + 6I^- \rightarrow 2Cr^{3+} + 7H_2O + 3I_2$$

The advantages of the half cell method are: (1) the method gives you the electrode polarity directly, (2) you do not have to guess at the proper reaction direction - it results from the calculation, (3) you use the information directly from the tables without reversing anything, (4) the occurrence of the same material in both half cells at different concentrations causes no problems, and (5), most importantly, when one of the electrodes is a reference electrode, you usually know its voltage *vs* the SHE directly and thus you only have to do half the work.

What is the voltage of a cell containing a zinc electrode and zinc(II) at 0.0500 M in one half cell and a platinum electrode and iodate ion at 0.100 M, iodine at 0.00500 M, and hydrogen ion at 0.100 M in the other half cell? Which electrode is the cathode? The half reaction that applies to the zinc-containing half cell is

$$Zn^{2+} + 2e^- \rightarrow Zn(s) \qquad E° = -0.764\ V$$

and that to the iodine containing half call is

$$IO_3^- + 6H^+ + 5e^- \rightarrow \tfrac{1}{2}I_2 + 3H_2O \qquad E° = 1.178\ V$$

The voltage of the zinc electrode *vs* the SHE is

$$E = -0.764\ V - (0.0592V/2)\log(1/[Zn^{2+}])$$

$$E = -0.764\ V - (0.0296V)\log(1/0.05) = -0.803\ V$$

The voltage of the platinum electrode *vs* the SHE is

$$E = 1.178\ V - (0.0592V/5)\log([I_2]^{1/2}/[IO_3^-][H^+]^6)$$

$$E = 1.178\ V - (0.0118V)\log(0.005)^{1/2}/(0.1)(0.1)^6 = 1.109\ V$$

When these values are placed on the voltage scale, the results are as follows:

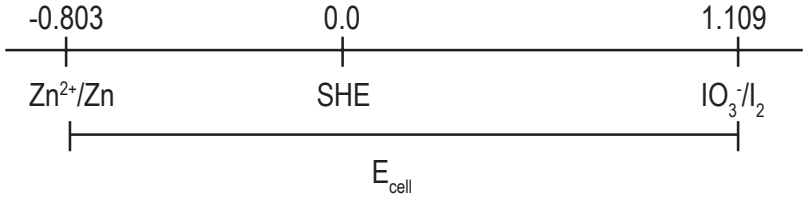

$$E_{cell} = 1.109\ V - (-0.803\ V) = 1.912\ V$$

Since the platinum electrode is positive with respect to the zinc electrode, it is the cathode. Thus iodate ion is reduced to iodine and zinc metal is oxidized to zinc ion in the cell.

5.4 REDOX TITRATIONS

5.4.1 INTRODUCTION

Attention will now be focussed on the analytical uses of electrochemistry. One obvious application of redox reactions is in titrations. Redox titrations are performed in the same manner as other titrations, but there are certain differences which must be examined. In a Brønsted acid-base titration, the titration

curve is a plot of pH *vs* mL titrant. To help understand such titrations, titration curves were constructed by performing equilibrium calculations. The titration curve in a redox titration is a plot of the voltage of an electrochemical cell, which contains an electrode sensitive to the materials in the titration vessel, *vs* mL of titrant. Such calculations are done using the Nernst equation rather than an equilibrium constant. In such calculations one electrode senses the situation in the titration vessel and the other is a reference electrode, the SCE or SHE for example. One generally refers to the titration as a plot of the voltage of the test electrode *vs* mL of titrant. It is understood that the "voltage of the test electrode" really means the "voltage of the test electrode as measured *vs* the reference electrode", since it is impossible to measure the voltage of a single electrode.

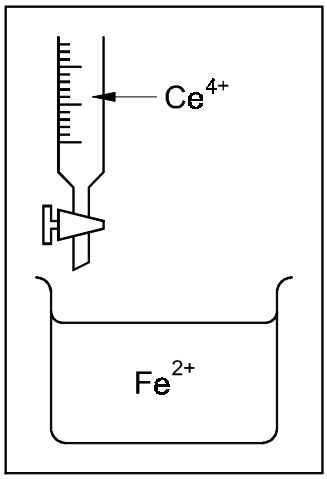

Figure 5-7

To start, a very simple redox reaction will be taken as an example of such a titration,

$$Fe^{2+} + Ce^{4+} \rightarrow Fe^{3+} + Ce^{3+}$$

where Fe(II) will be the unknown, standard Ce(IV) will be the titrant, and Fe(III) and Ce(III) the products. If you were asked to set up such a titration, it would be relatively straight forward. You would place the Ce(IV) in the buret and the Fe(II) in the titration vessel, as shown in Figure 5-7, and add titrant to unknown until the equivalence point was reached. As in all one-step titrations there are four regions, and the solution in the titration vessel differs from region to region. For this particular titration Table 5-3 lists the reagents present in the various regions.

Table 5-3

Titration Region	Ions (in high concentration.) in Vessel
1 - before addn. of Ce(IV)	Fe(II)
2 - before eq. pt.	Fe(II), Fe(III), Ce(III)
3 - at eq. pt.	Fe(III), Ce(III)
4 - after eq. pt.	Fe(III), Ce(IV), Ce(III)

Since this is a redox titration, one has the possibility of following the titration with an electrochemical cell. How would this be done? There is a great temptation to place a solution containing Fe in one cell compartment and Ce in the other, much like the very first cell described in the introduction and shown in Figure 5-1. Resist this temptation - it would be impossible to carry out a titration with such a cell. Instead the titration set-up shown in Figure 5-7 will be modified. The first thing to do is add a test electrode to the titration vessel to sense the materials present, as shown in Figure 5-8, and Pt would be a good choice. Is this all that is needed? Since one cannot measure the voltage of a single electrode, a second electrode is needed to complete the cell. This electrode must not change voltage during the titration, and thus it must be a reference electrode. In order to have the measurements make sense, only the voltage of the test electrode can change, and thus all changes in the cell voltage will be due to changes at the test electrode. If one were simply going to do theoretical calculations, the SHE would be used as the reference.

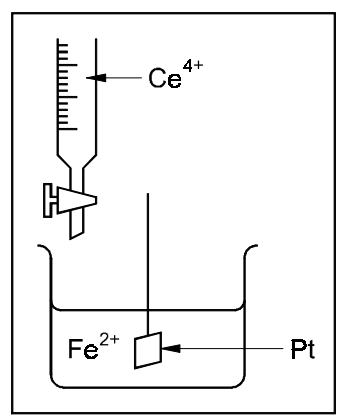

Figure 5-8

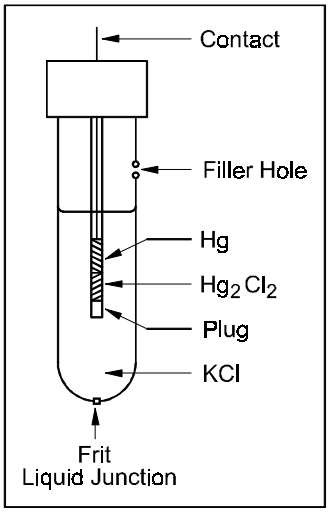

Figure 5-9

If one were actually going to follow a titration with a cell, a more practical reference electrode like the SCE would be used.

The schematic for a *commercial* calomel electrode is shown in Figure 5-9. If it is an SCE, a small amount of solid KCl is added to maintain a saturated solution of KCl in the electrode. The internal solution will slowly drain out through the frit at the liquid junction. When the level of the internal solution becomes too low, more internal solution is added through the filler hole.

The final set-up would be as shown in Figure 5-10. NOTE that since the cell contains a reference electrode, the cell reaction must involve the materials in that electrode. Assuming the SCE is used as reference, the cell reaction would involve Hg, Hg_2Cl_2, and Cl^-. The titration reaction involves the materials in the buret and the titration vessel, the cell reaction involves the materials in the two half cells, only one of which is the titration vessel. *The cell reaction and the titration reaction will not be the same!* The cell reaction will change as the titration proceeds, the titration reaction will not.

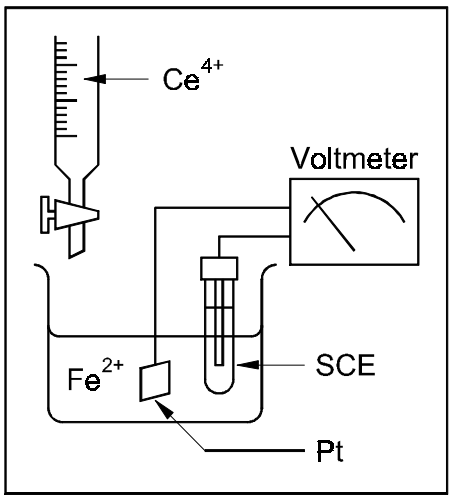

Figure 5-10

For this example the titration reaction will always be:

$$Fe^{2+} + Ce^{4+} \rightarrow Fe^{3+} + Ce^{3+}$$

The cell reaction, which is a function of the titration region, is as follows:

Region 1, before the addition of any titrant. The only cation of interest present is Fe(II). There is no complete redox couple and the cell voltage is not well defined. There is no definite cell reaction and no stable cell voltage - in theory or in practice.

Region 2, before the equivalence point. Fe(II), Fe(III), and Ce(III) are present. The only complete redox couple present is Fe(III)/Fe(II) and therefore this couple establishes the voltage at the Pt electrode. Therefore it is involved in the cell reaction:

$$2Fe^{3+} + 2Hg + 2Cl^- \rightarrow 2Fe^{2+} + Hg_2Cl_2$$

The cell voltage is stable and easily measured.

Region 3, at the equivalence point. Fe(III) and Ce(III) are the only cations of interest present; there is no complete redox couple present. Thus there is no definite cell reaction and the cell voltage in practice is not stable or easily measured. However, there is a method for calculating, in theory, what the cell voltage should be.

Region 4, after the equivalence point. Fe(III), Ce(IV), and Ce(III) are present. Now the only complete redox couple present is Ce(IV)/Ce(III) and thus this couple establishes the voltage at the Pt electrode. Therefore it is involved in the cell reaction:

$$2Ce^{4+} + 2Hg + 2Cl^- \rightarrow 2Ce^{3+} + Hg_2Cl_2$$

Again in this region the cell voltage is stable and readily measured.

5.4.2 REDOX TITRATION CURVES

Calculations involving redox titrations are relatively simple. The first step is to determine the region in the titration for which the calculation is to be made (Regions 2, 3, or 4, calculations cannot be done for Region 1). If the region is 2 or 4, select the redox couple which is present in that region. Assume the titration reaction goes to completion and calculate the concentrations of the species in the redox couple ([Ox] and [Red] for the Ox/Red couple). Use these concentrations to calculate the voltage of the test electrode *vs* SHE, and convert to the voltage *vs* the actual reference electrode used in the cell, if necessary. If you are in Region 3, use the special method described below.

A bit more complicated reaction will be taken as the example in illustrating these calculations. A sample containing Sn(II) will be titrated with standard Ce(IV). The titration apparatus is shown in Figure 5-11.

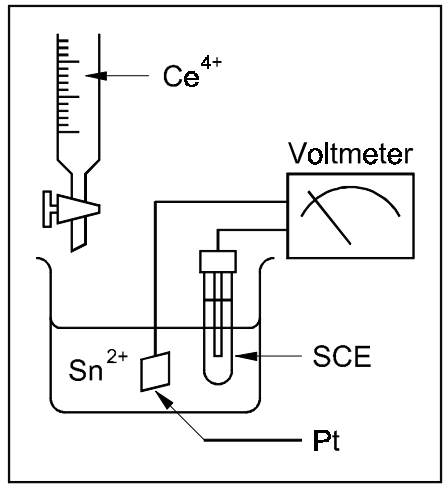

Figure 5-11

The necessary data are as follows:

$Sn^{4+} + 2e^- \rightarrow Sn^{2+}$ $\quad E° = 0.14$ V

$Ce^{4+} + e^- \rightarrow Ce^{3+}$ $\quad E° = 1.28$ V

$E_{SCE\ vs\ SHE} = +0.242$ V

Volume of sample = 50.0 mL

[Ce(IV)] in buret = 0.0200 M

[Sn(II)] originally in unknown = 0.0100 M

The titration reaction is

$$Sn(II) + 2Ce(IV) \rightarrow Sn(IV) + 2Ce(III)$$

Generally one considers cell voltages to be unsigned; that is, cell voltages will always have a positive value and the cell reaction will be written as it goes spontaneously. This is a convention adopted by chemists. One does not refer to an automobile battery as being +12 V, it is simply a 12 V battery, but the positive and negative terminals are clearly marked. In constructing a titration curve, and in most electrochemical measurements in analytical chemistry, "conventional" measurements will not be made. Instead the voltage of a test electrode *vs* a reference electrode will be measured. That voltage will sometimes be positive, sometimes negative. These signs will be retained in the discussion and in the plots, and can be used to determine which way the cell reaction actually proceeds, if this is of interest.

As an example of a calculation in Region 2, determine the voltage of the test electrode after the addition of 30.0 mL of titrant (Ce(IV)).

mol Ce(IV) = (0.0300 L)(0.0200 mol/L) = 0.000600 mol

mol Sn(II) reacted = (½)(0.000600 mol) = 0.000300 mol

mol Sn(II) original = (0.0500 L)(0.0100 mol/L) = 0.000500 mol

It is obvious that not enough titrant has been added to react with all the unknown, that Region 2 of the titration is involved. Thus the redox couple which establishes the voltage of the Pt electrode is Sn(IV)/Sn(II).

mol Sn(IV) produced = mol Sn(II) reacted

[Sn(IV)] = 0.000300/0.0800 mol/L

[Sn(II)] = (0.000500 - 0.000300)/0.0800 mol/L

$$E_{Pt} = 0.14\,V - \frac{0.0592\,V}{2}\log\frac{[Sn(II)]}{[Sn(IV)]} \tag{5-21}$$

$$E_{Pt} = 0.14\,V - (0.0296\,V)\log\frac{2\times10^{-4}/8\times10^{-2}}{3\times10^{-4}/8\times10^{-2}} \tag{5-22}$$

Notice *that in this case* the volumes cancel out and only the moles are needed for the calculation. This can save some calculation effort. However, this will not always be the case and to be safe, you should check every time you use only the moles and not the concentration.

$$E_{Pt} = 0.14\ V - (0.0296V)\log 0.67 = 0.15\ V \tag{5-23}$$

This is the voltage of the test electrode *vs* SHE. To obtain the voltage of the test electrode *vs* SCE, use the scale explained in Section 5.3 above.

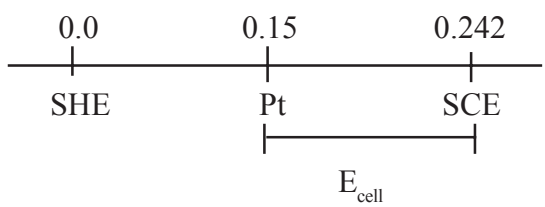

Thus the voltage of the Pt or test electrode *vs* the reference electrode is -0.09 V (the cell voltage is 0.09 V). The SCE is the cathode and the cell reaction, written spontaneously, is

$$Sn(II) + Hg_2Cl_2 \rightarrow Sn(IV) + 2Hg + 2Cl^-$$

For Region 4 one might ask "what is the voltage of the test electrode after the addition of 80.0 mL of titrant?"

mol Ce(IV) added = (0.08 L)(0.02 mol/L) = 0.0016 mol

mol Sn(II) "reacted" = (½)0.0016 mol = 0.0008 mol

mol Sn(II) original = 0.0005 mol

It is obvious that the amount of Ce(IV) added is more than enough to react with all the unknown, therefore the titration is indeed in Region 4, all the Sn(II) has been consumed, and the redox couple that establishes the electrode voltage is Ce(IV)/Ce(III). Thus the calculation must be done with this half reaction.

mol Ce(III) = 2(mol Sn(II) orig)

mol Ce(III) = 2(0.0005 mol) = 0.001 mol

[Ce(III)] = 0.001/0.13 mol/L

mol Ce(IV) = 0.0016 mol - 0.001 mol

[Ce(IV)] = 0.0006/0.13 mol/L

$$E_{Pt} = 1.28V - \frac{0.0592V}{1}\log\frac{[Ce(III)]}{[Ce(IV)]} \qquad (5\text{-}24)$$

$$E_{Pt} = 1.28V - (0.0592V)\log\frac{0.00100/0.13}{0.0006/0.13} \qquad (5\text{-}25)$$

Again the volumes cancel so that only the moles need be used in the calculation.

$$E_{Pt} = 1.28\ V - (0.0592V)\log 1.67 = 1.27\ V \qquad (5\text{-}26)$$

This result is with respect to the SHE. What is needed is the result *vs* the SCE and this is obtained in the usual manner.

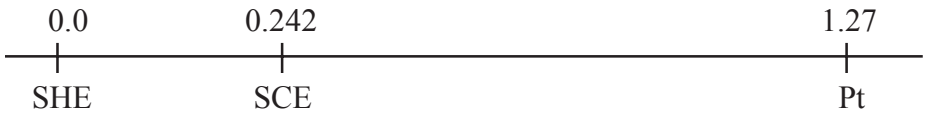

The voltage of the Pt test electrode *vs* the SCE is 1.27 - 0.24 V, or 1.03 V. The Pt electrode is the cathode. Thus the cell reaction is

$$2Ce(IV) + 2Hg + 2Cl^- \rightarrow 2Ce(III) + Hg_2Cl_2$$

The method of calculation is somewhat different at the equivalence point, since there are no complete redox couples present in the cell. This case is examined by asking the question "what is the voltage of the test electrode after the addition of 50.0 mL of titrant?"

mol Ce(IV) added = (0.05 L)(0.02 mol/L) = 0.001 mol

mol Sn(II) reacted = (½)0.001 mol = 0.0005 mol

mol Sn(II) original = 0.0005 mol

This is obviously Region 3, since there is no more Sn(II) in the beaker and no excess Ce(IV) has been added. There is no full redox couple present to establish a stable voltage. The approach to use here is as follows: From the stoichiometry of the titration reaction it can be stated that at every point in the titration, *including* the equivalence point,

$$2[Sn(IV)] = [Ce(III)] \qquad \text{(products)} \qquad (5\text{-}27)$$

Also at the equivalence point (and only at that point),

$$2[Sn(II)]_{ep} = [Ce(IV)]_{ep} \qquad \text{(reactants)} \qquad (5\text{-}28)$$

At the equivalence point [Ce(IV)] and [Sn(II)] are very, very low, but not zero. Thus, if one knew these concentrations, one could calculate the voltage of the test electrode from either Eqn. (5-21) or Eqn. (5-24), assuming that [Sn(IV)] and [Ce(III)] are also known.

$$(E_{Pt})_{ep} = 0.14V - \frac{0.0592V}{2}\log\frac{[Sn(II)]}{[Sn(IV)]} \qquad (5\text{-}21)$$

$$(E_{Pt})_{ep} = 1.28V - \frac{0.0592V}{1}\log\frac{[Ce(III)]}{[Ce(IV)]} \qquad (5\text{-}24)$$

The unknown concentrations can be made to cancel if Eqns. (5-21) and (5-24) are *added*. It is tempting to set them equal to each other. This is perfectly correct, but if this approach is taken, *the concentrations will not cancel and the equivalence point voltage cannot be calculated.* The first step in the addition is to make the coefficient of the log term equal in both equations. This usually involves multiplication of one of the equations by an integer.

$$2(E_{Pt})_{ep} = 2E^\circ_{Sn} - \frac{2(0.0592)}{2}\log\frac{[Sn(II)]}{[Sn(IV)]} \tag{5-29}$$

$$(E_{Pt})_{ep} = E^\circ_{Ce} - 0.0592\log\frac{[Ce(III)]}{[Ce(IV)]} \tag{5-30}$$

$$3E_{ep} = 2E^\circ_{Sn} + E^\circ_{Ce} - 0.0592\log\frac{[Sn(II)][Ce(III)]}{[Sn(IV)][Ce(IV)]} \tag{5-31}$$

On substituting Eqns. (5-27) and (5-28) above (involving Sn as a function of the Ce concentrations) into Eqn. (5-31) one obtains

$$3E_{ep} = 2E^\circ_{Sn} + E^\circ_{Ce} - 0.0592\log\frac{[Sn(II)]2[Sn(IV)]}{[Sn(IV)]2[Sn(II)]} \tag{5-32}$$

The fraction in the log term becomes unity, and since the logarithm of unity is zero

$$3E_{ep} = 2E^\circ_{Sn} + E^\circ_{Ce} \tag{5-33}$$

or

$$E_{ep} = (2E^\circ_{Sn} + E^\circ_{Ce})/3 = (2(0.14\text{ V}) + 1.28\text{ V})/3 = 0.52\text{ V} \tag{5-34}$$

This is with respect to the SHE. To get the voltage *vs* the SCE, use the scale again.

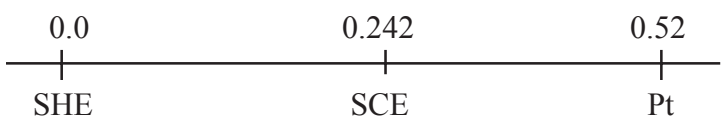

The test electrode voltage is (0.52 V - 0.24 V) or +0.28 V *vs* the SCE, and this electrode is the cathode in the cell. Note that between the 30 mL point in the titration and the equivalence point, the test electrode has gone from being negative (the anode) *vs* SCE to being positive (the cathode).

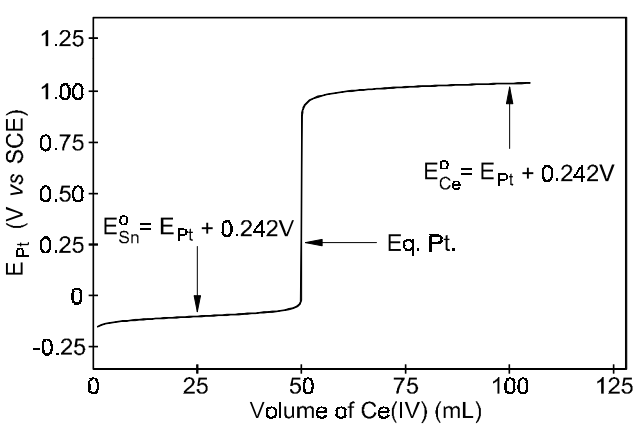

Figure 5-12

From the results above it appears that the equivalence point voltage is some sort of weighted average of the standard potentials of the titrant and titrand half reactions. Some texts present a "general" formula for the equivalence point voltage. However, this "general" formula is not, in fact, general. It *does not apply* to all cases. Therefore it is best to derive the formula for each individual situation as was done above.

If many such calculations had been carried out over the entire titration, the titration curve shown in Figure 5-12 would result. This has the usual sigmoid shape with the large change

in voltage occurring at the equivalence point. At the midpoint of the titration (25 mL of titrant added in the example used here) the concentrations of Sn(II) and Sn(IV) are equal and the voltage of the cell at this point can be used to determine the standard potential of the *titrand* couple. It would be the standard potential (neglecting activity effects and Lewis base complexation reactions) if the reference electrode used were the SHE. Note the similarity with acid-base titrations in which the pH at the midpoint approximates the pK_a of the acid. Likewise at the 100% over titrated point (100 mL of titrant added in the example) the concentrations of Ce(III) and Ce(IV) are equal and the voltage at this point can be used to determine the standard potential of the *titrant* couple. Since the positions of the "flat" regions (or redox buffer regions) of the curve are established by the standard potentials, it is obvious why the equivalence point voltage is some type of average of these two standard potentials. It is also obvious that the magnitude of the jump in voltage at the equivalence point is a direct function of the difference in standard potentials. As in all titrations, the bigger this jump, the easier it is to determine the equivalence point. If the numbers of electrons, *n*, involved in the titrant and titrand half reactions are equal, the titration curve is symmetrical, that is, the equivalence point occurs in the centre of the step. If not, the curve is unsymmetrical as in the example here.

5.4.3 REDOX INDICATORS

Although redox titrations can in theory always be followed by electrochemical means, it is not always convenient to do so for two reasons: (1) such titrations, when done manually, are often rather tedious and (2) not all redox couples establish an easily measured voltage at an electrode for kinetic reasons. Just as in acid-base titrations, indicators exist for redox reactions. These will often function in cases where an electrochemical cell would not. Thus such indicators must be discussed in order to determine how to properly select one for a titration.

A redox indicator must have the following properties: (1) it must undergo a redox reaction, (2) it must be highly coloured to be visible in low concentrations, and (3) it must be differently coloured in its oxidized and reduced forms. These indicators are usually highly conjugated organic molecules.

The indicator must form a redox couple and the half reaction for the indicator couple can be written as shown below.

$$Ind_{Ox} + xH^+ + ne^- \rightarrow Ind_{Red} \qquad E^\circ_{Ind}$$

For organic molecules, n = 2, and often x = 2. The reason for this is that organic radicals are usually unstable in aqueous solutions and thus electrons are transferred in pairs. The reduction usually also requires a pair of hydrogen ions. Methylene blue will be used here as an example of a redox indicator. The oxidized form, called methylene blue, is conjugated across the entire ring system and is a deep blue

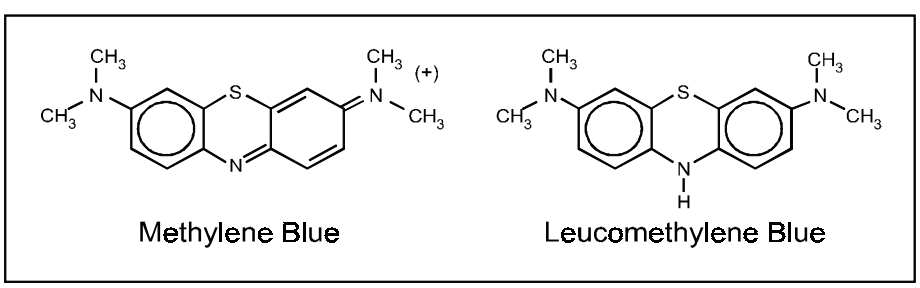

Figure 5-13

in colour. The reduced form, often called leucomethylene blue, has had this conjugation broken and is colourless. This is illustrated in Figure 5-13. The indicator half reaction in this case is

$$MeB^+ + H^+ + 2e^- \rightarrow LMeB \qquad E° = 0.53\ V$$

and x = 1, not the more usual 2.

As with acid-base indicators, a whole series of redox indicators exists covering a wide range in standard potentials. The correct indicator for any titration is one that changes colour at the equivalence point. The problem is the selection of the correct indicator. As with all indicators, the greatest colour change occurs approximately when $[Ind_{Ox}] = [Ind_{Red}]$ or when $[Ind_{Ox}]/[Ind_{Red}] = 1$. This condition must occur at or near the equivalence point. How is this established?

Imagine that the titration is being followed using an electrochemical cell with a SHE as the reference electrode (this will simplify the calculations). Also imagine that the indicator couple establishes the voltage at the test electrode. The calculated voltage is the same regardless of which couple actually establishes the electrode voltage, since all couples are in equilibrium in the solution. Assuming the same indicator half cell reaction as written above.

$$Ind_{Ox} + xH^+ + ne^- \rightarrow Ind_{Red} \qquad E°_{Ind}$$

The voltage of the test electrode *vs* SHE will be given by

$$E_{test} = E°_{Ind} - \frac{0.0592}{n}\log\frac{[Ind_R]}{[Ind_O][H^+]^x} \tag{5-35}$$

$$E_{test} = E°_{Ind} - \frac{0.0592}{n}\log\frac{[Ind_R]}{[Ind_O]} + \frac{x(0.0592)}{n}\log[H^+] \tag{5-36}$$

Now since the maximum colour change occurs when $[Ind_{Ox}]/[Ind_{Red}] = 1$, the first log term on the right of Eqn. (5-36) becomes zero.

$$E_{maxcc} = E°_{Ind} + x(0.0592/n)\log[H^+] \tag{5-37}$$

$$E_{maxcc} = E°_{Ind} - x(0.0592/n)pH \tag{5-38}$$

The maximum colour change should occur at the equivalence point. To establish this simply set

$$E_{ep} = E_{maxcc} \tag{5-39}$$

or

$$E_{ep} = E°_{Ind} - x(0.0592/n)pH \tag{5-40}$$

Eqn. (5-40) is rearranged to solve for the standard potential of the proper indicator.

$$E°_{Ind} = E_{ep} + x(0.0592/n)pH \tag{5-41}$$

In this case pH is the pH in the titration vessel and *x* applies to the particular indicator being examined. To choose the correct indicator first calculate the voltage at the equivalence point (*vs* SHE) as shown in Section 5.4.2 above. Next calculate $x(0.0592/n)$pH for indicators which have E° values close to E_{ep}. Sum these two numbers and select the indicator which has E° closest to the sum.

Taking as an example the titration of Sn(II) with Ce(IV) used above, the first step is to calculate the voltage at the equivalence point. This was 0.52 V *vs* SHE. This titration would normally be carried out under very acidic conditions, say 1 M HCl. Thus the pH would be zero. This simplifies the calculation somewhat.

$E°_{Ind} = 0.52\ V + x(0.0592/n)(0)$

$E°_{Ind} = 0.52\ V$

Thus you would select an indicator with a standard potential as close to 0.52 V as possible. Methylene blue, with a standard potential of 0.53 V, would do very well.

5.4.4 PRACTICAL CONSIDERATIONS

Just as there are common strong acids used for acid-base titrations, there are strong oxidizing agents, three used commonly, for redox titrations. These are:

Ce(IV). This is the strongest of the three, especially when used in nitric or perchloric acid media.

$KMnO_4$. This is a strong oxidant which is deep purple in colour. Thus it can act as its own indicator since all reactions in which it is involved will turn purple right after the equivalence point.

$K_2Cr_2O_7$. This is the weakest of the three, but it comes as a primary standard and thus requires no standardization.

There are no common strong reducing agents, since all such reagents are unstable, especially with regard to the oxygen in the air. When a strong reducing agent is needed, either V(II) or Cr(II) is often used. Cr(II) is the stronger of the two. These must be prepared and standardized immediately before use and care must be taken to avoid contact with the air.

The common primary standards used to standardize redox reagents are as follows:

To standardize reducing agents either KIO_3 or $K_2Cr_2O_7$ is often used.

To standardize oxidizing agents As_2O_3, $Fe(NH_4)_2(SO_4)_2{\cdot}6H_2O$ (Fe(II)), or $H_2C_2O_4$ is used. The latter, oxalic acid, is oxidized to carbon dioxide, in its reactions.

Several medium strength redox reagents are available. The most often used of these reagents is iodine. I_2 is a weak oxidizing agent and I^- is a weak reducing agent. These reagents are used so often that their use is given a special name - iodometry. The half reaction involved is

$$I_2 + 2e^- \rightarrow 2I^-$$

In the presence of excess I^-, which is often present when I_2 is being used as an oxidizing reagent, the iodine reacts with the iodide ion to form triiodide ion, I_3^-.

$$I_2 + I^- \rightarrow I_3^-$$

where the triiodide ion becomes the weak oxidizing agent. The half reaction now becomes

$$I_3^- + 2e^- \rightarrow 3I^-$$

In many cases iodide ion is used to determine an oxidizing agent. Excess iodide is added to the unknown and triiodide ion is formed. This triiodide ion is then back titrated with thiosulfate ion ($S_2O_3^{2-}$). Thiosulfate ion has the same structure as sulfate except that one of the outer oxygen atoms has been replaced by a sulfur.

$$2S_2O_3^{2-} + I_3^- \rightarrow S_4O_6^{2-} + 3I^-$$

Starch, a well known indicator, is used in this titration. This is not a redox indicator. Instead starch forms a complex with iodine which is deep purple in colour. This deep purple colour disappears at the end point of the titration.

5.5 POTENTIOMETRY

The last topic to be discussed in electrochemistry is potentiometry. This is the direct measurement of the voltage of an electrochemical cell. In analytical chemistry the attempt is made to use this direct measurement to determine the concentration of a substance of interest in one of the cell compartments. In principle this should provide a very simple, direct, rapid, and non-destructive method of analysis. There are two types of electrodes used in potentiometry, redox electrodes and membrane electrodes.

5.5.1 REDOX ELECTRODES

For the purpose of this discussion, a redox electrode will be defined as an electrode at which the mechanism that establishes the electrode voltage is a redox reaction. At such electrodes electrons (which carry the charge in metallic conductors) are exchanged with ions (which carry the charge in solution). These are the only types of electrodes which have been discussed up to this point.

In all electrochemical cells which contain only redox electrodes, there are two (or more) such electrodes, and each electrode has at least two reactants involved in the voltage-determining mechanism - these two reactants are the two substances that make up the redox couple. If one considers the "general" electrochemical cell shown in Figure 5-14, the reactions in the cell will be:

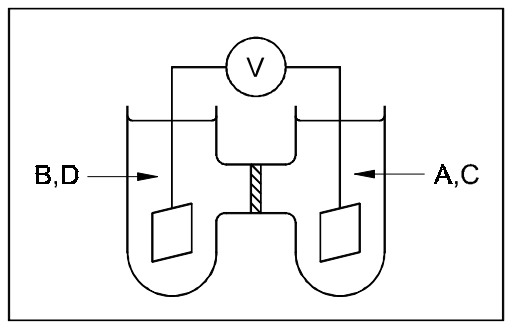

Figure 5-14

$aA \rightarrow cC + ne^-$ at the anode

$bB + ne^- \rightarrow dD$ at cathode

$aA + bB \rightarrow cC + dD$ overall

and the cell voltage is given by the Nernst Equation (5-13):

$$E = E^\circ - \left(\frac{0.05916}{n}\right)\log\frac{[C]^c[D]^d}{[A]^a[B]^b} \qquad (5\text{-}13)$$

Unfortunately in Eqn. (5-13) there are four unknowns, [A], [B], [C], and [D], and only one measured quantity, E_{cell}. Under these circumstances it would not be possible to obtain concentration information from a single cell measurement. Matters can be helped considerably by making one of the cell electrodes a reference electrode (with fixed reactant concentrations). This will always be assumed to be the anode. Thus the test half reaction will be a reduction and the test electrode a cathode. *Reduction potentials* will always be used in the calculations for the test electrode which will result in the calculations providing the correct sign of the test electrode with respect to the reference electrode.

If the reference electrode is assumed to be a calomel electrode, the half reaction

$$aA \rightarrow cC + ne^-$$

becomes

$$2Hg + 2Cl^- \rightarrow Hg_2Cl_2 + 2e^-$$

and the overall cell reaction would be

$$nHg + nCl^- + bB \rightarrow (n/2)Hg_2Cl_2 + dD$$

The voltage of this cell would be given by

$$E_{test} = E° - \frac{0.0592}{n}\log\frac{[D]^d}{[B]^b[Cl^-]^n} \tag{5-42}$$

$$E_{test} = E° - \frac{0.0592}{n}\log\frac{1}{[Cl^-]^n} - \frac{0.0592}{n}\log\frac{[D]^d}{[B]^b} \tag{5-43}$$

$$E_{test} = E° + 0.0592\log[Cl^-] - \frac{0.0592}{n}\log\frac{[D]^d}{[B]^b} \tag{5-44}$$

since the activities of mercury and mercury(I) chloride are both unity. The concentration (and thus the activity) of chloride ion is constant (but not necessarily unity) which leads to the simplification

$$E_{test} = K - \frac{0.0592}{n}\log\frac{[D]^d}{[B]^b} \tag{5-45}$$

where the constant, K, depends on the standard potentials of the test and reference half reactions and on the concentrations in the reference electrode and has units of volts. Since the reference electrode has been assumed to be the anode, the calculated voltage can be either positive or negative, and will be that of the test electrode with respect to the reference electrode. Thus it will be referred to as E_{test} rather than E_{cell}. *This conforms to the way in which the measurements are actually made.*

The problem has been reduced to one measurement with two unknowns, [B] and [D]. In certain cases where one of the components of the redox couple under test has a fixed activity, this will become one measurement and one unknown, and it will be possible to use potentiometry to directly measure concentration. This is most readily done when one of the reactants is a solid. A case of such a redox system is one in which the pure metal is one half of the redox couple.

Copper is a good example of such a redox couple.

$$Cu^{2+} + 2e^- \rightarrow Cu(s)$$

$E_{test} = K_1 - (0.0592V/2)\log\{A_{Cu}/[Cu^{2+}]\}$

$E_{test} = K_1 - (0.0296V)\log(1/[Cu^{2+}] = K_1 + (0.0296V)\log[Cu^{2+}]$

$E_{test} = K_1 - (0.0296V)pCu$

Another familiar case involves both the pure metal and a solid precipitate.

Silver and silver chloride provide an example of this case.

$$AgCl(s) + e^- \rightarrow Ag(s) + Cl^-$$

$E_{test} = K_2 - (0.0592V)\log\{(A_{Ag})[Cl^-]/(A_{AgCl})$

$E_{test} = K_2 - (0.0592V)\log[Cl^-]$

$E_{test} = K_2 + (0.0592V)pCl$

There are a few cases where neither a pure metal nor a solid precipitate is involved. Nevertheless the concentration of one of the two materials making up the redox couple can be appropriately controlled.

A famous example of this type of system is the hydrogen electrode (not the SHE).

$$2H^+ + 2e^- \rightarrow H_2$$

$E_{test} = K_3 - (0.0592V/2)\log\{P_H/[H^+]^2\}$

If the pressure of hydrogen gas is now fixed at 1 atm,

$E_{test} = K_3 - (0.0592V/2)\log\{1/[H^+]^2\}$

$E_{test} = K_3 + (0.0592V)\log[H^+]$

$E_{test} = K_3 - (0.0592V)pH$

Thus the hydrogen electrode could be used to measure the pH of a solution.

Redox half cells in which both of the components in the half reaction are present as ions in solution, *e.g.* Cr(III)/Cr(II), are seldom used in direct potentiometry due to the difficulty in establishing a fixed and known activity of one of the two reactants. Also in practice many substances fail to establish a stable electrode voltage for kinetic reasons. For example, in theory one should be able to measure the concentration of Fe(II) in a solution using an iron electrode in the same manner as for Cu(II) above. In practice, the voltage at an iron electrode is unstable, is not directly related to the concentration of Fe(II) in the solution, and cannot be used in direct potentiometry.

Absolute Potentiometry

There are two common methods of making potentiometric measurements. The first, and simplest, is "absolute" potentiometry. In this type of measurement, the value of K, the constant in the Nernst equation, Eqn. (5-45) above, is taken from E° tables. Only one cell measurement is needed in this case to determine concentration. Since the object is to calculate an unknown concentration from a known cell voltage, the calculations are done in reverse order to those in which one calculates an unknown cell voltage from known concentrations.

The best method of describing how to perform such a determination is to take an example. In this example the voltage of a silver electrode coated with insoluble silver chloride is measured as +0.104 V *vs* SCE when placed in a cell containing chloride ion. The measurement apparatus is shown in Figure 5-15. Determine the $[Cl^-]$ in the test electrode compartment. The reaction at the test electrode is

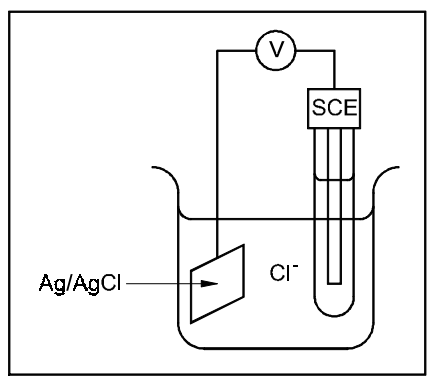

Figure 5-15

$$AgCl + e^- \rightarrow Ag + Cl^- \qquad E° = 0.222\ V$$

The first step is to determine what the voltage of the test electrode would be if measured *vs* the SHE. This is easily seen if one draws the voltage scale.

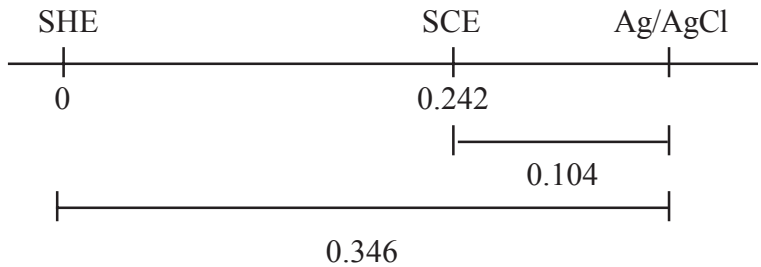

From this diagram it is concluded that the voltage of the silver/silver chloride electrode would be +0.346 V *vs* SHE. It is now a simple matter to calculate the concentration of chloride ion using the Nernst equation.

$$0.346\ V = 0.222\ V - (0.0592V)\log[Cl^-]$$

$$\log[Cl^-] = (0.346 - 0.222)/-0.0592 = -2.10$$

$$[Cl^-] = 8.0 \times 10^{-3}\ M$$

Although this method is simple, it depends on the accuracy of the values found in the tables, and more importantly, on the ability of the experimental system to follow the expected theoretical predictions. The voltage of a SCE in theory is 0.242 V *vs* SHE. However, this value can vary by over 10 mV from electrode to electrode, depending on age and method of preparation. Variations of a few mV can cause large changes in calculated concentrations. For this reason absolute potentiometry is seldom used in practice.

Cell calibration

In practice the constant, K, in Eqn. (5-45) is not determined from tables as was done above, but is "measured" using a standard solution in the electrochemical cell. This is often referred to as "standardizing the cell". Since the measurement of pH is so important, the example of such a measurement using a hydrogen electrode will be discussed. The first step in measuring the pH of an unknown is to standardize the system with a solution of known pH. This solution is placed in the cell shown in Figure 5-16 and the voltage of the test electrode is measured *vs* the reference electrode. In this method the type of reference electrode is unimportant. For this case (as shown above)

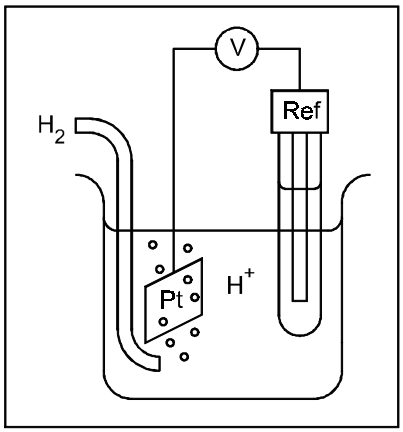

Figure 5-16

$$(E_{test})_s = K - (0.0592)pH_s \qquad (5\text{-}46)$$

where "s" stands for standard. Solving for K leads to

$$K = E_s + (0.0592)pH_s \qquad (5\text{-}47)$$

Next the sample solution is placed in the test electrode compartment and a second measurement is made.

$$(E_{test})_u = K - (0.0592)pH_u \quad (5\text{-}48)$$

where "u" stands for unknown. On substitution for K from the standard solution, Eqn. (5-47)

$$E_u = E_s + (0.0592)pH_s - (0.0592)pH_u \quad (5\text{-}49)$$

$$(0.0592)pH_u = (0.0592)pH_s + E_s - E_u \quad (5\text{-}50)$$

$$pH_u = pH_s + (E_s - E_u)/0.0592 \quad (5\text{-}51)$$

Note that this applies only at 25°C and only to the measurement of pH. The value of K need never be found explicitly, instead the two cell voltages and the standard pH are used in Eqn. (5-51) to solve directly for the unknown pH. The more general equation for any temperature would be

$$pH_u = pH_s + F(E_s - E_u)/2.303RT \quad (5\text{-}52)$$

A numerical example will help in understanding the method. In this example a 0.0100 M Cu(II) solution is placed in a cell containing a reference electrode and a solid copper electrode and the voltage of the copper electrode is measured as +0.032 V *vs* the reference. A solution containing an unknown concentration of copper is then placed in the test half cell and the voltage of the copper electrode is measured as +0.010 V. The cell used in the measurement is shown in Figure 5-17. What is the $[Cu^{2+}]$?

The test cell half reaction is

$$Cu^{2+} + 2e^- \rightarrow Cu(s)$$

and thus one can write

$$E_{Cu} = K - (0.0592/2)\log\{1/[Cu^{2+}]\}$$

where K contains the standard potential for the reduction of copper and the contribution of the reference electrode. As usual, K can be determined by measurement of the standard solution.

$$K = (E_{Cu})_s - (0.0296)\log[Cu^{2+}]_s$$

Thus, for the case of the unknown solution

$$(E_{Cu})_u = (E_{Cu})_s - (0.0296)\log[Cu^{2+}]_s + (0.0296)\log[Cu^{2+}]_u$$

$$\log[Cu^{2+}]_u = \log[Cu^{2+}]_s + (E_u - E_s)/0.0296$$

$$\log[Cu^{2+}]_u = \log(0.0100) + (0.010\ V - 0.032\ V)/0.0296\ V$$

$$\log[Cu^{2+}]_u = -2.00 - 0.74 = -2.74$$

$$[Cu^{2+}] = 1.8 \times 10^{-3}\ M$$

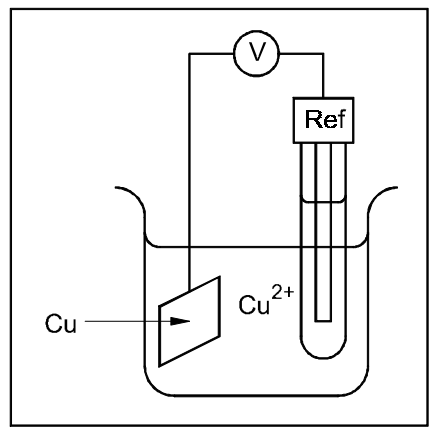

Figure 5-17

Practical considerations

On the surface potentiometry appears simple and direct - simply dip the test and reference electrodes into the unknown solution (after standardization) and make a quick voltage measurement. From this measurement the unknown concentration can be determined. The technique is so rapid and direct that it

can often be used to measure substances in flowing streams. However, aside from the problem (as mentioned above) that many redox couples, which theoretically could provide a useful voltage, cannot be employed in practice, another difficulty is also encountered. Any substance, which can react with the ion or molecule that establishes the voltage at the test electrode, will change the measured voltage. This may cause an error in the analysis.

Taking Cu(II) as an example, if ammonia is present it will react with the Cu(II) to form one or more complexes. If sufficient ammonia is present the tetramine complex is formed.

$$Cu^{2+} + 4NH_3 \rightarrow Cu(NH_3)_4^{2+}$$

One way to approach this problem is to assume that the copper electrode responds only to the concentration of free copper, Cu^{2+},

$$E_{Cu} = E° - (0.0592/2)\log\{1/[Cu^{2+}]\}$$

and since this concentration will be very low in the presence of excess ammonia, the measured voltage will indicate this. In other words, the potentiometric measurement will indicate the correct concentration of free copper ion, but *it will not indicate correctly the total concentration of Cu(II) present*. If the analyst does not know about this effect, then he/she would be led to assume that the total amount of copper present is very small. On the other hand, if the analyst is interested in determining just the concentration of free copper ion, this measurement will produce a valid result. Thus potentiometry is capable of providing some information on speciation.

Potentiometry is subject to strong matrix effects, and unless these are controlled, measurement errors can be made. Thus one must be familiar with the sample matrix in order to interpret voltage measurements properly.

Another difficulty that can occur at redox electrodes is interference between two redox couples that do not normally react in solution. Say that you are trying to measure the pH of a solution that contains Fe(III). You might place a platinum electrode in solution and bubble hydrogen gas past it. Hydrogen will not, in practice, reduce Fe(III) to Fe(II) in solution, although it should in theory. Thus you might expect the following reaction to establish the test electrode voltage:

$$2H^+ + 2e^- \rightarrow H_2$$

and you should be able to measure the pH by fixing the pressure of hydrogen gas. However, Fe(III) reacts quite well at the platinum electrode, and the following overall reaction occurs there:

$$2Fe^{3+} + H_2 \rightarrow 2Fe^{2+} + 2H^+$$

The platinum electrode acts as a catalyst for the above reaction (which does not occur in the bulk of solution) and the voltage of the electrode is between that which the hydrogen couple alone and the iron couple alone would establish. This is called a mixed potential and cannot be used to determine any of the concentrations involved.

5.5.2 MEMBRANE ELECTRODES

Most chemists know that pH is not usually measured with a hydrogen electrode and that it can be measured successfully in the presence of substances such as Fe(III). These measurements are made with an electrode known as the *glass electrode*. This is not a redox electrode, it is a *membrane* electrode, and it operates using a mechanism entirely different from a redox electrode, although the final results appear to be the same.

Cells which contain membranes also contain redox electrodes since these latter are required to exchange electrons between the ions in solution and the wires that connect to the voltage measuring device. This is sometimes confusing, especially since the equations that relate the membrane response to the ionic concentrations are very similar to the Nernst equation. It should be kept in mind that: (1) the voltage establishing mechanism of an ion sensing membrane is entirely different from that of a redox electrode, (2) there are no standard potential tables for membranes, (3) one cannot use the "absolute" method with membrane electrodes, and (4) since there are no E° tables, the half-cell method is not applicable.

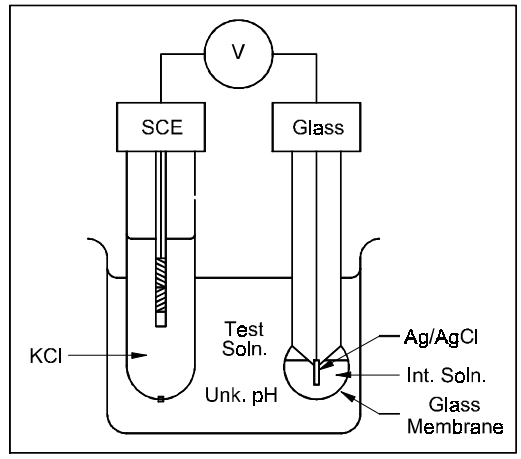

Figure 5-18

Membrane electrodes are very important in potentiometry and will be discussed in some detail. The glass electrode will serve as a good example of this type of electrode. Just as for redox electrodes, a reference electrode is used with the glass membrane electrode. The normal glass electrode/reference electrode pH cell is shown in Figure 5-18. Often the reference electrode and the glass electrode are combined into one assembly, referred to as a combination electrode. This sometimes leads individuals to assume that only one electrode is needed for such measurements. This is not the case - a combination electrode contains both the glass and reference electrodes.

To understand how such an electrochemical cell operates, the cell is shown arranged a bit differently in Figure 5-19.

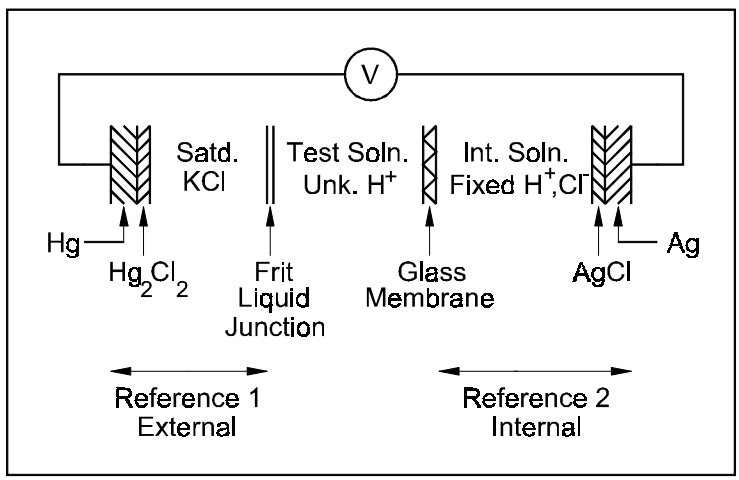

Figure 5-19

This cell actually contains not one, but two reference electrodes, one contacting the test solution (the external reference) and one contacting the solution internal to the membrane assembly (usually called the membrane electrode). This latter reference electrode is the internal reference. As mentioned above, these redox electrodes are needed to exchange electrons with the ions in the solutions, to convert electron flow into ion flow.

The approach to determining the cell voltage will be somewhat different in the case of membranes. One can assume that the total voltage of the cell is the sum of the contributions of its parts. It will be assumed that the external reference electrode is a SCE. Thus

$$E_{cell} = E_{SCE} + E_j + E_{membrane} + E_{AgCl} \qquad (5\text{-}52)$$

E_{SCE} is the contribution of the *external* reference electrode. E_j is the *liquid junction potential*, the voltage that exists between two dissimilar ionic solutions. This will be discussed in some detail later. $E_{membrane}$, hereafter called simply E_m, is the voltage that is developed across the membrane. E_{AgCl} is the contribution of the silver/silver chloride internal reference electrode. Membrane electrodes contain internal

solutions which have fixed ionic concentrations. In the case of the glass electrode, the internal solution contains both H^+ and Cl^- ions at fixed concentrations. Since the chloride ion concentration is constant, the internal silver/silver chloride electrode is in reality a reference electrode, as mentioned above.

E_{SCE} and E_{AgCl} are constant, thus

$$E_{cell} = C_1 + E_j + E_m \tag{5-53}$$

and for the time being E_j will be considered to be constant also, leading to

$$E_{cell} = C_2 + E_m \tag{5-54}$$

The next question to be answered is "What is E_m and how is it established?" In the following a mechanism is proposed for membrane operation which is readily understood. This does not mean that all membrane electrodes operate by such a mechanism. In fact the glass electrode *does not operate by this mechanism*. The actual mechanism varies from membrane to membrane.

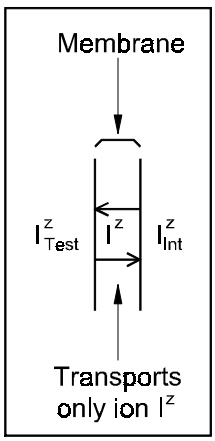

Figure 5-20

The membrane is a material that can be thought of as transporting only one ion across it, as depicted in Figure 5-20. In such a case a voltage develops across the membrane which is related to the difference in concentration of the transported ion on the two sides of the membrane. The ion of interest (that which the membrane transports) on the side of the membrane which has the highest concentration will always move toward the side with the lowest concentration. If the ion of interest is a cation, this will leave an excess of negative charge on the side of highest concentration (the side the cations are leaving). Likewise a positive charge will build up on the low concentration side, the side cations are moving toward. This charge build-up causes a voltage to develop across the membrane, negative on the high concentration side, positive on the low side, as depicted in Figure 5-21. This voltage difference retards the flow of ions across the membrane and eventually stops it altogether when an equilibrium is reached. It is intuitive that this voltage difference will depend on the difference in concentration of the ions on the two sides of the membrane. The picture is the same if the transported ion is an anion except that the voltage polarities are reversed.

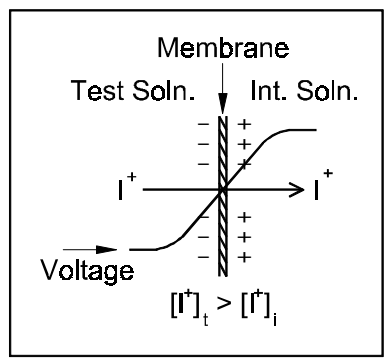

Figure 5-21

If the membrane transports ions I^z, where z is the ionic charge, then the membrane voltage will be given by

$$E_m = \frac{2.303RT}{zF} \log \frac{(A_I)_t}{(A_I)_i} \tag{5-55}$$

where "t" stands for the test or external side and "i" for the internal side. Note that z includes not only the charge but also its sign and is positive for cations and negative for anions. For the case of the glass electrode:

$$E_m = \frac{2.303RT}{zF} \log \frac{(A_H)_t}{(A_H)_i} \tag{5-56}$$

$$E_m = \frac{0.0592}{+1}\log\frac{(A_H)_t}{(A_H)_i} \quad \text{at } 25^\circ\text{C} \tag{5-57}$$

and for the entire cell, using Eqn. (5-54)

$$E_{cell} = C + 0.0592\log\frac{(A_H)_t}{(A_H)_i} \tag{5-58}$$

However, $(A_H)_i$ is constant, leading to

$$E_{cell} = C - 0.0592\log(A_H)_i + 0.0592\log(A_H)_t \tag{5-59}$$

$$E_{cell} = K + 0.0592\log(A_H)_t \tag{5-60}$$

$$E_{cell} = K - 0.0592pH_t \tag{5-61}$$

The above equations have been presented in such a manner that E_{cell} is also E_{test}, the voltage of the membrane electrode (with its internal reference) *vs* the external reference electrode. Again this is how the measurement is actually made. For the general case, assuming as usual that activity and concentration are equal:

$$E_{test} = K + \frac{0.0592}{z}\log[I^{z\pm}] \tag{5-62}$$

K contains the contributions from the internal solution and the two reference electrodes, *it is not a standard potential*, it cannot be found in tables. Thus the absolute method, described above for redox electrodes, cannot be used with membrane electrodes.

Membrane electrodes do not operate in the same manner as redox electrodes. Redox electrodes exchange electrons at their surfaces in redox half reactions. They act as a place where electron current flow in metal wires (which are electron conductors) can be converted to ionic current flow in solutions (where ions conduct current). Membrane electrodes do not have redox reactions at their surfaces, instead they operate on the basis only of ion transport. Thus they are not sensitive to redox couples present in solution and can measure pH in the presence of ions such as Fe(III) or $Cr_2O_7^{2-}$. Yet the response of membrane electrodes follows an equation very similar to the Nernst equation. The major difference is that the number of electrons exchanged (the moles of charge transported across the interface) in the Nernst equation, *n*, is replaced with the ionic charge, *z* (also the moles of charge transported across the interface).

Liquid junction potential

It was mentioned above that a voltage, called the liquid junction potential, exists whenever two dissimilar ionic solutions are in contact. This will occur at the frit in all electrochemical cells which have a frit. The liquid junction occurs at the frit between the external reference electrode and the test solution in all potentiometric measurements.

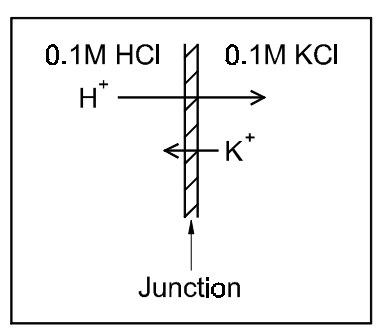

Figure 5-22

To determine whether this will cause a problem, one must know how the liquid junction potential arises. It comes about basically because the various ions in solution move or diffuse at different rates. As an example, assume that the left side of a liquid junction consists of a solution of 0.100 M HCl and the right side 0.100 M KCl, as depicted in Figure 5-22. To a first approximation the chloride ion will not diffuse

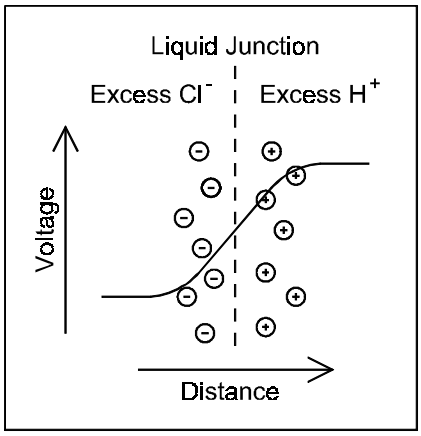

Figure 5-23

in either direction since its concentration is the same on both sides of the junction. Hydrogen ion will move toward the right and potassium ion will move toward the left, as shown. The hydrogen ion moves about six times more rapidly than the potassium ion. Thus hydrogen ion will move out of the left solution faster than it can be replaced by potassium ion and a negative charge builds up on the left side. An equal positive charge builds up on the right side. This in turn causes a voltage difference to develop across the junction, the situation pictured in Figure 5-23. This voltage difference will retard the flow of hydrogen ions, will increase the flow of potassium ions, and will also cause some chloride ions to move from left to right. Thus a steady state will be reached, with a steady junction potential. Obviously this voltage will depend on the types of ions present on both sides of the junction and on the concentrations of those ions. If the ions move at similar rates, the junction potential will be small.

Note that the membrane voltage is a rather special case of the junction potential. In a liquid junction all ions move, but at different rates. In an ideal membrane only one ion moves, the rates of motion of all other ions are zero. Obviously the membrane voltage is useful, but the liquid junction potential has the capability to cause problems. What can be done about E_j, if anything? In most practical cases E_j cannot be calculated. When making measurements on a sample solution whose components are unknown, there is no possibility of calculating E_j. It cannot be measured independently. Thus the only possibility is to try to make it as small and as constant as possible. This is one reason for the popularity of the SCE, which contains ~4 M KCl as its electrolyte, as an external reference electrode. The rates of diffusion of potassium and chloride ions are almost equal. Thus they will diffuse away from the reference electrode at the same rate and charge will not build up. The concentration of KCl is so high that the contribution of the ions in the test solution is normally swamped out. Thus most junctions involving a SCE are believed to have a fairly constant junction potential of only a few millivolts.

Membrane types.

All cells employing membrane electrodes are constructed in the same fashion. Each has an external reference electrode, often the SCE. Each also has a "membrane electrode" consisting of the ion sensitive membrane, the internal solution, and the internal reference electrode, often a Ag/AgCl electrode. This membrane electrode is usually called an *ion selective electrode* or ISE. The major differences between ion selective electrodes is in the material which makes up the membrane. There are three main types of membranes.

1) Glass membranes. These consist of specially formulated glasses (Pyrex glass will not work at all) which are bonded to a regular glass or plastic tube to form the electrode. Glass electrodes can be obtained which are sensitive to H^+, K^+, Na^+, Ag^+, and Tl^+.

2) Liquid membranes. These consist of solutions of special solutes in organic liquids. The solvent must be immiscible with water. The solute must be insoluble in water and must form an ion pair or complex with a specific ion. Thus the solute can transport the specific ion, and only the specific ion, across the membrane. This liquid membrane solution is suspended in a porous organic polymer, often poly(vinyl chloride), which is mechanically held in place in the electrode body separating the internal and test solutions. These membranes can be obtained with sensitivities for Ca^{2+}, Mg^{2+}, K^+, Rb^+, Cs^+, NO_3^-, ClO_4^-, and BF_4^-.

3) Solid state membranes. These are usually either single crystals, such as LaF_3, or insoluble precipitates, usually containing silver salts, which conduct ionically. Although glass is a solid, it is not considered in this category. Such membranes can be obtained which are sensitive to F^-, Cl^-, Br^-, I^-, SCN^-, S^{2-}, Cu^{2+}, Ag^+, and Pb^{2+}.

pH measurements.

The measurement of pH is an example of the use of an ion selective electrode, and it is done so often that this particular measurement will be discussed in some detail. In fact the voltmeter used with the glass electrode is called a pH meter, not a voltmeter. Recall from the discussion above

$$E_{glass} = K + (0.0592)\log[H^+] = K - (0.0592)pH \qquad (5\text{-}62)$$

The voltage of the glass electrode with respect to the external reference is directly proportional to pH. Thus the measuring voltmeter can be calibrated directly in pH instead of in volts. This is shown in Figure 5-24, where each 59.2 mV on the voltage scale is equivalent to 1.00 pH unit on the pH scale. The manufacturers of pH electrodes purposely arrange the internal solution so that the voltage of the cell is close to zero at pH 7. In other words, they design cells with a K of ~0.414 V.

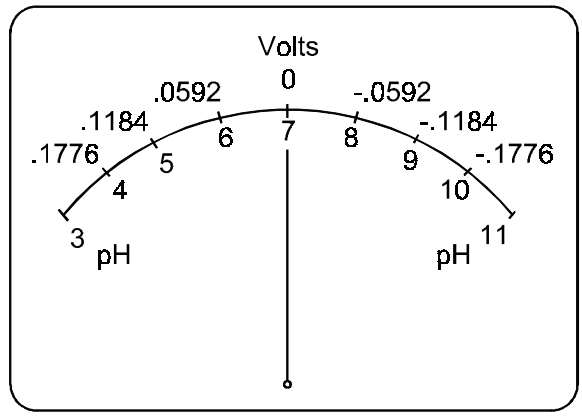

Figure 5-24

To use the meter one simply places the electrodes in a solution of known pH and uses an offsetting control, usually called a *calibrate* or *standardize* control to set the meter to the pH of the standard. This standardizes the meter. Then place the electrodes, after rinsing and drying them, into the unknown. The meter should read the pH of the unknown solution directly.

However, two problems arise with this simple calibration procedure.

1) What if the temperature is not 25°C? At 20°C $E_{glass} = K - (0.0582)pH$ and at 37°C (body temperature) $E_{glass} = K - (0.0615)pH$. K might also be a function of temperature. Thus a meter set for 25°C will not be in calibration at any other temperature. This problem is solved by incorporating a control in the meter that changes its scale factor (the slope of the relationship between pH and voltage). The control is appropriately called the *temperature* control. When set to the temperature of the solution the meter will be in proper calibration for that temperature.

2) What if the response of the membrane electrode is not ideal? This problem has not been mentioned yet. Ideal response is often called *Nernstian* response, because the change in voltage of the membrane electrode follows the ideal or Nernstian factor - at 25°C a change of 1.00 pH unit will cause a change in voltage of 59.2 mV. In other words the slope of the pH/voltage curve is -59.2 mV at 25°C. As glass and other membrane electrodes age, this slope tends to decrease in absolute magnitude. The overall response, however, is still linear. If this occurs, the meter, even though set to the correct temperature, will not be in proper calibration. Some meters have a *slope* control to help with this problem. If the meter does not have such a control, the temperature control can be used instead. *Two pH standards* must be used in conjunction with these controls for proper calibration. This is called the two buffer method of calibration. The steps in the use of this method are as follows:

a) Set the *temperature* control to the temperature of the solutions (this is done automatically by some meters using a temperature sensor). If the meter has a *slope* control, set it to 100 (indicating that the meter is set for 100% of the theoretical slope).

b) Place the electrodes in buffer 1 (near pH 7 if possible). Adjust the meter to the correct pH with the *standardization* control.

c) Place the electrodes in buffer 2. If the meter does not read the correct pH, set it to the correct pH with the *slope* control (if available) or the *temperature* control.

d) Repeat steps (b) and (c) above until both readings are correct. If the meter does not have a *slope* control, the *temperature* control, after final adjustment, may not read the proper temperature. This should not bother you, the meter will be correctly calibrated.

e) Measure the pH of the samples.

The meaning of pH.

At this point time will be taken to answer a rather fundamental question - what is pH? In introductory chemistry texts and so far in this text pH has been considered to be -log[H^+]. This seems a rather practical and useful definition, so why bother going any further? Problems arise when one has to make a measurement. pH can be defined in several ways, but the measurement must correspond to the definition. Thus one must ask, what does the pH meter measure? In fact one must go a bit deeper and ask, to what does the glass electrode respond? In reality the glass electrode responds to the activity of hydrogen ion, not its concentration. Since this is the case, it might make the most sense to define pH as -logA_H. Unfortunately, two problems arise with this definition:

1) To date there is no way to calculate the activity of a single ion *exactly*. Therefore standards in which the A_H is exactly known are not available and thus there is no way to calibrate the meter. In other words, if pH were to be defined as -logA_H, there would be no buffers of exactly known pH.

2) The liquid junction potential interferes. How does this come about? Assume that the first problem had been solved, that standards were available where the activity of H^+ were exactly known. No longer neglect E_j (use Eqn. 5-53)), but assume that the electrode response is Nernstian.

$$(E_{glass})_s = K + (E_j)_s - (0.0592)pH_s \qquad (5\text{-}63)$$

$$(E_{glass})_u = K + (E_j)_u - (0.0592)pH_u \qquad (5\text{-}64)$$

Combining Eqns. (5-63) and (5-64) to remove K leads to

$$pH_u = pH_s + \frac{E_s - E_u}{0.0592} + \frac{(E_j)_u - (E_j)_s}{0.0592} \qquad (5\text{-}65)$$

If the liquid junction potential changes between the measurement in the standard and that in the test solution, then the term $\Delta E_j/0.0592$ will not be zero, and the pH measurement will not be correct.

What can be done then? The following three measures are taken:

1) Select standards where the activity of hydrogen ion can be estimated as closely as possible. Several such buffers are available at different pH values.

2) Neglect ΔE_j, but use a reference electrode such as the SCE at which ΔE_j should be small.

3) Define pH as:

$$pH_u = pH_s + \frac{F}{2.303RT}\{(E_{glass})_s - (E_{glass})_u\} \qquad (5\text{-}66)$$

In other words, pH is the reading of a properly standardized pH meter. This definition is practical or "operational", but not theoretically very satisfying.

So in reality is pH = -log[H^+]? *NO!* Is pH = -logA_H? *ALMOST,* especially in dilute solutions between pH values of about 3 and 11. However, in such solutions, activity and concentration are almost identical also.

Measurements with other electrodes.

In general pH measurements are the only ISE measurements in which the meter is calibrated in pI where I is the ion of interest, although in theory meters could be calibrated for other ions in this fashion. There are three common methods of using ion selective electrodes, each with its own advantages and disadvantages.

1) The two standard method. This method, as the name implies, requires two standards and is the equivalent of the two buffer method of pH calibration. It does not assume a Nernstian response, but it does assume that the electrode response is linear in pI. Thus

$$E_{test} = K + (slope)\log[I^z] \qquad (5\text{-}67)$$

where slope ~2.303RT/zF. For the two standards

$$E_{s1} = K + (slope)\log[I^z]_{s1} \qquad (5\text{-}67a)$$

$$E_{s2} = K + (slope)\log[I^z]_{s2} \qquad (5\text{-}67b)$$

Combining Eqns. (5-67a) and (5-67b) gives an expression for the slope.

$$slope = \frac{E_{s1} - E_{s2}}{\log[I]_{s1} - \log[I]_{s2}} \qquad (5\text{-}68)$$

From the slope and either (5-67a) or (5-67b), K can be obtained. These are then used in (5-69) below to obtain the result for the unknown

$$\log[I]_u = \{E_u - K\}/slope \qquad (5\text{-}69)$$

A membrane electrode sensitive to nitrate ion is used to test for this ion in agricultural run off. In a 50.0 ppm nitrate solution the voltage of the ISE (*vs* the reference) is -13.5 mV and in a 5.00 ppm nitrate solution it is 43.6 mV. What is the nitrate concentration (in both ppm and mol/L) in a sample that reads 85.4 mV?

Slope of response curve = (-13.5 mV - 43.6 mV)/(log50.0 - log 5.00)

Slope = -57.1 mV/((1.699 - 0.699) = -57.1 mV

K = E_1 - slope(log(ppm)$_1$) = -13.5 mV -(-57.1 mV)(log50.0) = 83.5 mV

log(ppm)$_u$ = (E_u - K)/slope = (85.4 mV - 83.5 mV)/-57.1 mV = -0.0331

Concentration in ppm = $10^{-0.0331}$ = 0.927 ppm = 0.93 ppm

Conc. in mol/L = 0.927 mg/L(0.001 g/mg)/62.005 g/mol = 1.5×10^{-5} mol/L

---

2) The calibration curve method. This method makes no assumptions as to either the slope or linearity of response of the electrode, but requires the largest number of standard solutions. As usual the voltage of the ISE is measured for a set of standard solutions and a graph of E_{ISE} is plotted *vs* log[I]. The voltage for the unknown is then measured and the calibration graph is used to determine the unknown concentration from this voltage, as shown in Figure 5-25. This is usually the most accurate method.

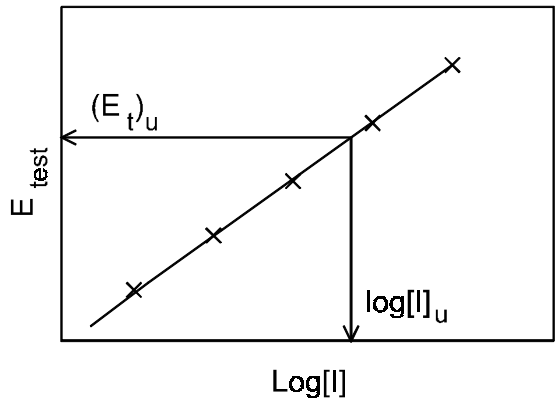

Figure 5-25

3) Method of standard addition. This method assumes both a Nernstian and a linear response, but uses only one standard solution. It can be used if the response is non-Nernstian, but one must know the slope from independent measurements. The principle is the same as in other methods of standard addition, but the math is a little different.

Assume that E_{ISE} for an electrode sensitive to F^- was +0.105 V *vs* the external reference electrode in a sample of tap water. A second sample consisting of 20.0 mL of tap water and 2.00 mL of 0.00100 M F^- gave a voltage of 0.067 V. Calculate the $[F^-]$ in the tap water. Assume Nernstian response.

$0.105V = K + (0.0592V/-1)\log[F^-]_u$

$0.105V = K - (0.0592V)\log[F^-]_u$ and

$0.067V = K - (0.0592V)\log\{[F^-]_u(20.0\ mL/22.0\ mL) + 0.001(2\ mL/22\ mL)\}$

K can be cancelled by subtraction, leading to

$(0.105V - 0.067V)/0.0592V = \log\{0.909[F^-]_u + 9.09\times10^{-5}\} - \log[F^-]_u$

$0.642 = \log\{0.909 + 9.09\times10^{-5}/[F^-]_u\}$

$10^{0.642} = 4.38 = 0.909 + (9.09\times10^{-5})/[F^-]_u$

$[F^-]_u = (9.09\times10^{-5})/(4.38 - 0.909) = 2.6\times10^{-5}\ M$

Practical considerations.

When making pH measurements, the pH scale is defined operationally as described above and one normally does not worry about the distinction between activity and concentration. pH is what the meter says it is. This is not so with other ion selective measurements because no operational scales exist for ions other than H^+, although such scales could be established. Concentration rather than activity is the usual quantity desired when making most ion selective measurements, yet membrane electrodes respond to activity, not concentration. You might think that a calibration curve prepared by plotting log[I] *vs* E_{test} might solve this problem, since such curves can be used even if they are not linear. (Remember that a plot of $\log(A_I)$ *vs* E_{test} will be linear.) However, even this fails when the ionic strength of the standards does not equal that of the samples, which is the usual case.

The solution to this problem is to force the ionic strength to be the same in all solutions, the standards and the samples. When this is done, the activity coefficient of the ion to be determined is made constant, resulting in a linear plot of log[I] *vs* E_{test}. In addition the unknown concentrations can be read directly from the calibration curve for the same reason. This is accomplished by adding a total ionic strength adjusting buffer (TISAB) to the standards and the unknowns. This buffer contains enough non-interfering electrolyte to swamp out the contribution to the ionic strength of the ions in the samples and standards, thus making the ionic strength constant.

Although ion selective electrodes (membrane electrodes) do not suffer from interference from redox couples, they do suffer from other matrix effects just like redox electrodes. Thus any substance which reacts with the ion to which the membrane responds will affect the voltage measurement, and thus possibly the results of the analysis. Refer to the discussion above in Section 5.5.1of the effect of ammonia on the response of a copper redox electrode. This same effect would occur with a copper ion selective electrode.

There is an additional problem. As one might suspect, there is no membrane which is responsive to a single ion. Practical membranes show a maximum response to one ion and a diminished response to other *similar* ions. Thus a membrane that shows a maximum response to Na^+ might also respond to some extent to K^+ or Li^+ or H^+. A membrane that responds to Ca^{2+} would also be expected to respond somewhat to Mg^{2+} or Sr^{2+}.

An equation that describes *reasonably well* the response of an actual membrane is as follows:

$$E = K + \frac{0.0592}{z}\log\{[I^z] + k_J[J^x]^{z/x} + k_L[L^y]^{z/y} + \cdots\} \qquad (5\text{-}70)$$

where ion I is the ion to which the membrane responds primarily, ions J, L, *etc.* are the interfering ions, and k_J, k_L, *etc.* are called the selectivity coefficients. The magnitude of the selectivity coefficient indicates the magnitude of the potential interference, the larger the value, the greater the interference. Obviously if the concentration of the interfering ions is zero, the response will be ideal.

The practical effect of these interfering ions is to limit the range of response of the ion selective electrode. The maximum range is obtained in the absence of any interfering ions. As the concentration of an interfering ion increases, the electrode will begin to respond to the interfering ion when the concentration of the primary ion drops too low. The concentration of primary ion at which this interference first begins depends on the concentration of the interfering ion and on the selectivity coefficient. This is demonstrated by Figure 5-26 in which the primary ion is assumed to be Na^+ and the interfering ion to be K^+. Unless the concentration of potassium is known, a very unlikely circumstance in the case of a real sample, the calibration curve can only be used in the linear region, and this region depends on the concentration of interfering ion. This type of interference is usually present to some extent.

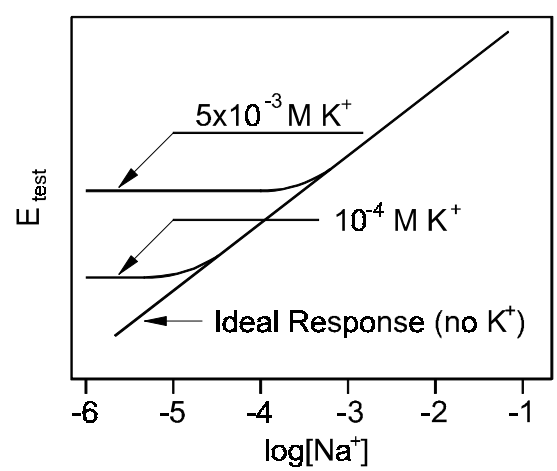

Figure 5-26

The most well known example of this type of interference is the "alkaline error" observed in pH measurements. The common glass electrode shows some response to Na^+ and K^+. At pH of 12 or more (usually in NaOH or KOH solutions) the concentration of H^+ is very low while that of the interfering ion, either Na^+ or K^+, is high and the electrode becomes responsive to the interfering ion, making pH

measurements difficult or impossible. This problem is not observed in $Ba(OH)_2$ solutions. There are special glasses for use in alkaline solutions which help somewhat.

If no interfering ions are present, will the response of the electrode go to ever decreasing concentrations? Obviously not. The actual response of an ISE is shown in Figure 5-27. What causes the response to tail off at low concentrations? One mechanism commonly thought to cause this phenomenon is "leakage" of the primary ion from the membrane into solution. For example the fluoride ISE uses a solid state membrane of LaF_3, an insoluble salt. If the $[F^-]$ in solution becomes very low, some of the membrane dissolves,

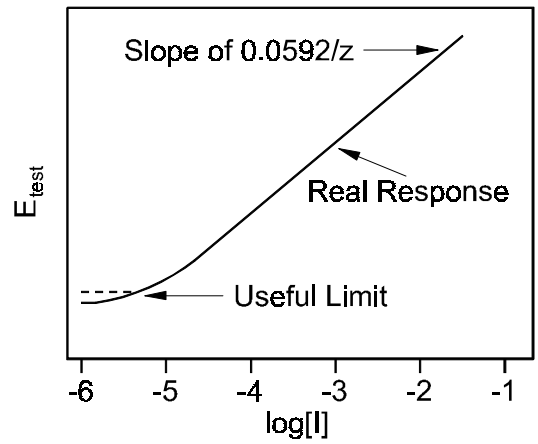

Figure 5-27

$$LaF_3 \rightarrow La^{3+} + 3F^-$$

and fluoride ion now appears in the solution, producing an electrode response. The electrode "self-destructs", so to speak, causing a limitation in its response. With the notable exception of the glass electrode for pH measurement and the sulfide electrode for pS measurement, most ion selective electrodes show a linear response from about 0.1 M to between $1x10^{-5}$ and $1x10^{-6}$ M. Thus these electrodes can be used for both trace and major component analysis.

An excellent example of the problems encountered with ion selective electrodes and how these are solved can be demonstrated with the use of the fluoride ISE in the measurement of fluoride ion in municipal water systems. Fluoride ion is added to many municipal water supplies to aid in the prevention of dental cavities. The total concentration of fluoride must be kept within certain limits and thus it must be carefully monitored. An ISE provides a rapid and inexpensive method for the determination of fluoride. However, three common problems arise with the use of a fluoride ISE.

1) The hydroxide ion is very similar to fluoride ion in size, charge, and polarizability. Thus it is an interfering ion. If the pH ≥ 8, the concentration of OH^- may be too high to make accurate fluoride measurements.

2) HF is a weak acid. At pH ≤ 5, F^- is converted to HF. Since the electrode responds to F^-, not HF, errors begin to arise at low pH.

3) Some cations, *e.g.* Fe(III) and Al(III), form very strong complexes with fluoride ion. If these cations are present, the fluoride will be bound as complexes to which the electrode does not respond.

What can be done in order to measure the total fluoride concentration in a sample such as tap water? One adds a buffer (TISAB) of pH ≈ 6 or 7 which contains EDTA (ethylenediamine tetraacetic acid). The buffer sets the pH correctly to avoid HF and OH^- interferences and adds enough electrolyte to make the ionic strength constant. The EDTA complexes metal ions very strongly and will release any fluoride bound to Al(III) or Fe(III). This assures that all fluoride is present as F^-, the ion to which the electrode responds, and provides an accurate measurement.

Accuracy.

The final topic to be considered is the expected error in measurements involving potentiometry. The general equation for the response of an ISE neglecting interfering ions is

$$E_{ISE} = K + \frac{0.0257}{z}\ln[I] \qquad (5\text{-}71)$$

One can proceed in the same manner as in spectrophotometry, Section 4.2.4. Let dE_{ISE} represent the error in the measurement of voltage and d[I] represent the error in concentration resulting from the error in voltage.

$$dE_{ISE} = \frac{0.0257}{z} d\ln[I] = \frac{0.0257}{z}\left(\frac{d[I]}{[I]}\right) \qquad (5\text{-}72)$$

$$\frac{d[I]}{[I]} = \frac{z}{0.0257} dE_{ISE} \qquad (5\text{-}73)$$

Now d[I]/[I] is the relative error in concentration and dE_{ise} is the absolute error in voltage measurement. Thus

$$\text{Rel error in [I]} = (z/0.0257)(\text{Abs error in E}) \qquad (5\text{-}74)$$

The absolute error in voltage is usually of the order of about 2 mV under normal conditions. Thus the relative error in [I] = 0.002z/0.0257. If z = ±1, this leads to a relative error of about 8%, if z = ±2, the error becomes about 15%.

In summary, one must be careful when using potentiometry with ion selective electrodes to avoid matrix errors. When used correctly potentiometry provides fast, simple, and usually non-destructive, but not highly accurate results.

5.6 PROBLEMS

Sections 5.1 to 5.3: Redox Reactions and Cell Voltage Calculations

5-1) Balance the following redox equations:

$Zn(s) + NO_3^- \rightarrow Zn^{2+} + NH_4^+$ (acid)

$CH_3CH{=}CHCH_3 + MnO_4^- \rightarrow CH_3COOH + Mn^{2+}$ (acid)

$Cr(OH)_4^- + HO_2^- \rightarrow CrO_4^{2-}$ (base)

$SeCN^- + BrO^- \rightarrow SeO_3^{2-} + OCN^- + Br^-$ (base)

$Cr_2O_7^{2-} + H_2O_2 \rightarrow Cr^{3+} + O_2(g)$ (acid)

$Zn(s) + OH^- \rightarrow Zn(OH)_4^{2-} + H_2(g)$ (base)

$ClO_3^- \rightarrow Cl^- + ClO_4^-$ (base)

$Cr_2O_7^{2-} + CH_3CH_2OH \rightarrow Cr^{3+} + CH_3COOH$ (acid)

$PbS(s) + NO_3^- \rightarrow Pb^{2+} + NO + S(s)$ (acid)

$CN^- + AsO_3^- \rightarrow CNO^- + As(s)$ (base)

5-2) Balance the following reactions and calculate the standard potentials for each (written in the spontaneous direction):

$F_2(g) + MnO_2(s) \rightarrow F^- + MnO_4^-$ (acid)

$Cr_2O_7^{2-} + H_2C_2O_4 \rightarrow Cr^{3+} + CO_2(g)$ (acid)

$S_2O_8^{2-} + I_2(aq) \rightarrow 2SO_4^{2-} + IO_3^-$ (acid)

$H_2O_2 + Cl^- \rightarrow Cl_2(g) + 2H_2O$ (acid)

$MnO_4^- + Cr(OH)_3(s) \rightarrow MnO_4^{2-} + Cr)_4^{2-}$ (base)

Ans: 1.18 V, 1.82 V, 0.83 V, 0.381 V, and 0.69 V.

5-3) Calculate the standard potentials for the following half reactions:

$Tl(III) + 3e^- \rightarrow Tl(s)$

$2HOI + 2H^+ + 2e^- \rightarrow I_2(aq) + 2H_2O$

$MnO_2(s) + 4H^+ + 2e^- \rightarrow Mn(II) + 2H_2O$

Ans: 0.74 V, 1.36 V, 1.24 V.

5-4) What is the voltage of a cell containing a copper electrode in contact with 0.0100 M Cu^{2+} and a platinum electrode in contact with 0.100 M Fe^{3+} and 0.0250 M Fe^{2+}? Which electrode is positive? Ans: 0.529 V, Pt.

5-5) A cell consists of a Zn electrode in a solution of 0.0500 M Zn^{2+} and a Au electrode in a solution containing both Br_2 and Br^- at 0.0100 M concentration. What is the cell voltage? Which electrode is the cathode? Ans: 1.949 V, Au.

5-6) The right electrode in a cell is a piece of platinum metal dipping into a solution of 0.0350 M Sn(IV) and 0.115 M Sn(II) in 1 F HCl. The left electrode is also platinum dipping into a solution of 0.00850 M Fe(III) and 0.0550 M Fe(II), also in 1 F HCl. What is the voltage of the right electrode with respect to the left electrode? Ans: -0.559 V.

5-7) The right half of an electrochemical cell has the following components in contact with a platinum electrode: $[I_3^-]$ = 0.00100 M, $[I^-]$ = 0.100 M. The left side has $[IO_3^-]$ = 0.0100 M, $[I_2]$ = 0.00100 M and $[H^+]$ = 0.100 M, also in contact with a Pt electrode. Calculate the cell voltage. Which electrode is the anode? Ans: 0.565 V, right electrode is the anode.

5-8) A cell contains two gold electrodes, one in a solution of 0.0550 M Cr(II) and 0.00730 M Cr(III), the other in a solution of 0.135 M Cr(III), 0.0250 M $Cr_2O_7^{2-}$, and 0.00500 M H^+. What is the voltage of this cell? Ans: 1.48 V.

5-9) The left compartment of a cell contains IO_3^- (0.0100 M), I_2 (0.00500 M) and H^+ (0.100 M). The right compartment contains $Cr_2O_7^{2-}$ (0.0100 M), Cr^{3+} (0.0200 M) and H^+ (1.00 M). Both compartments contain Pt electrodes. What is the cell voltage? Which compartment contains the cathode? Ans: 0.25 V, the right compartment.

Section 5.4: Redox Titrations

5-10) Nitrite ion can be determined in basic solution by titration with standard potassium permanganate producing nitrate ion and manganese dioxide ($NO_2^- + MnO_4^- \rightarrow NO_3^- + MnO_2(s)$). If 50.0 mL of sample are titrated with 0.02000 M $KMnO_4$, requiring 37.4 mL of titrant, compute the concentration of nitrite in the original sample. Ans: 0.0224 M

5-11) SO_2 can be determined in basic solution (as sulfite) by titration with chromate ($SO_3^{2-} + CrO_4^{2-} \rightarrow SO_4^{2-} + Cr(OH)_3$). If 50.0 mL of a sample are titrated with 0.0300 M K_2CrO_4, requiring 43.8 mL of titrant, compute the concentration of sulfite ion in the original sample. Ans: 0.0394 M.

5-12) Nitrous acid (HNO_2) can be determined in acid solution with permanganate (MnO_4^-), the products being NO_3^- and Mn^{2+}. 50.0 mL of a 0.0200 F solution of MnO_4^- are added to 50.0 mL of a solution of nitrous acid and allowed to react for 15 min. (for complete oxidation). 40.0 mL of 0.0200 F Fe(II) are required to titrate the excess MnO_4^- (products Mn^{2+}, Fe^{3+}). What is the formality of HNO_2 in the sample solution? Ans: 0.0420 F.

5-13) A solution of potassium permanganate ($KMnO_4$) is to be used to determine the uranium content of an ore by oxidizing U(IV) to UO_2^{2+}. The permanganate is standardized by titration with a standard solution of Fe(II). In the standardization 50.00 mL of permanganate required 39.42 mL of 0.03871 F Fe(II) (the Fe(II) is oxidized to (Fe(III)). 0.4931 g of ore are dissolved, the uranium converted entirely to U(IV) and diluted to 50 mL. The entire 50 mL required 36.91 mL of permanganate for titration. In both titrations the permanganate was reduced to Mn(II) and the pH was 0.00. What is the %U in the sample? Ans: 27.19%.

5-14) Iodine (as triiodide in excess I^-) is often used to determine arsenic:

$$I_3^- + H_3AsO_3 \rightarrow H_3AsO_4 + I^-$$

A standard solution of triiodide is prepared by adding 1.5734 g of primary standard KIO_3 to about 950 mL of a solution 0.400 F in KI at pH 1.00. The reaction is

$$IO_3^- + I^- \rightarrow I_3^-$$

The resulting standard solution is diluted to 1.000 L. 50.00 mL of a solution of H_3AsO_3 requires 21.93 mL of the triiodide to reach a starch-iodine end point. What is the concentration of arsenous acid in the unknown? (The chemical reactions are not necessarily balanced.) Ans: 9.674×10^{-3} M.

5-15) Calculate the voltage of a cell consisting of a Pt test electrode and a saturated calomel reference electrode used to follow the redox titration of Tl(I) with standard Ce(IV) used as titrant. Assume that the Tl(I) was originally 0.0500 M, that the titrant was 0.100 M, that the volume of Tl(I) sample was 50.0 mL, that 65.0 mL of the titrant have been added, and that the titration medium is 1F $HClO_4$. Which electrode is the anode? Ans: 1.43 V, SCE is the anode.

5-16) Calculate the voltage of a cell consisting of a Pt test electrode and an SCE reference electrode used to follow the titration of U(IV) with standard Ce(IV) used as titrant in 0.500 M HCl. Assume that the U(IV) was originally 0.0500 M, that the titrant was 0.100 M, that the volume of the U(IV) sample was 50.0 mL and that 35.0 mL of the titrant have been added. Which electrode is the anode? Ans: 0.067 V, SCE is anode.

5-17) A cell consisting of a Pt indicator electrode and an SCE reference electrode is used to follow the titration of 50.0 mL of 0.0200 F Br_2 (the unknown) with 0.0300 F Fe(II) (the titrant). What is the cell voltage after 60.0 mL of titrant have been added? Ans: 0.861 V

5-18) The titration of triiodide with standard thiosulfate is followed by measuring the voltage of a cell consisting of a Pt test electrode and an SCE reference electrode. What is the cell voltage after 60.0 mL of 0.0200 M thiosulfate have been added to 50.0 mL of 0.0100 M triiodide? Which electrode is the cathode? Ans: 0.059 V, SCE is the cathode.

5-19) What is the voltage of a Pt indicator electrode (*vs* SCE) after 40.0 mL of 0.0100 M MnO_4^- (titrant) have been added to 50.0 mL of 0.0200 M H_3SbO_3 (sample). Assume that pH = 0.00 (at this pH permanganate is reduced to Mn(II)). Ans: 1.05 V.

5-20) What is the voltage of a Pt electrode in the titration beaker *vs* SHE after 40.00 mL of 0.0500 M V^{2+} have been added to 50.00 mL of 0.0150 M $S_4O_6^{2-}$? In this titration V(II) is oxidized to V(III). Which electrode is the anode? Ans: -0.227 V, Pt electrode is the anode.

5-21) Calculate the theoretical equivalence point voltage (*vs* SHE) in the titration of U(IV) with Ce(IV) in H_2SO_4 at pH = 0. Ans: 0.70 V

5-22) What is the voltage (Pt electrode *vs* SHE) at the equivalence point in the titration of 50.0 mL of 0.0500 F UO_2^{2+} with 0.100 F standard Cr(II) at pH=0? Ans: 0.09 V.

5-23) From those indicators listed below, select the one most suited for determination of the equivalence point in a titration of Sn(II) with Fe(III) in 1 M HCl. *m*-Bromophenolindophenol, phenosafranine, indigotetrasulfonate, methylene blue, diphenylamine. Ans: Indigotetrasulfonate.

5-24) Ce(IV) solutions can be standardized by titration against primary standard ferrous ammonium sulfate ($Fe(NH_4)_2(SO_4)_2 \cdot 6H_2O$). Select an indicator from those listed below, assuming that the reaction is carried out in sulfuric acid at pH = 0 (it usually is). Ans: 5-methylferroin.

Indicators - 5-methylferroin, diphenylamine sulfonic acid, diphenylamine, methylene blue, phenosafranine.

5-25) From the table of indicators below select the indicator best suited to the titration of U(IV) with Ce(IV) in 0.100 F $HClO_4$. Ans: Diphenylamine.

Indicator	E of max colour change at pH 1.0
5-nitroferroin	1.25 V
5-methylferroin	1.02
diphenylamine	0.70
methylene blue	0.42
indigotetrasulfonate	0.30

Section 5.5: Potentiometry

5-26) The voltage of a lead electrode in a solution of Pb(II) was measured as -0.432 V with respect to a SCE reference electrode. What is the concentration of Pb(II) in the solution? Ans: 6.9×10^{-3} M

5-27) A mercury electrode coated with insoluble mercurous sulfate is used to determine the sulfate concentration in waste water samples. The voltage of the mercury electrode measured *vs* a saturated silver/silver chloride reference electrode is +0.461 V. What is the sulfate concentration in the sample? Ans: 0.0326 M.

5-28) The voltage of a zinc electrode in a 0.100 M Zn(II) solution was measured as -1.231 V *vs* a reference electrode. That same electrode gave a voltage of -1.256 V with an unknown. What is the concentration of Zn(II) in the unknown? Ans: 0.0143 M.

5-29) The voltage of an electrochemical cell containing a test electrode sensitive to $[H^+]$ and a reference electrode is measured as 0.173 V when a standard solution of pH 7.00 is in the cell. The same cell gives a reading of 0.183 V with a 0.0100 F solution of a weak acid in the cell. Assuming that the test electrode responds as follows:

$$E_{test\ (vs\ ref)} = K + 0.0592\log[H^+]$$

Calculate the K_a of the weak acid. Ans: $1.2\text{x}10^{-12}$.

5-30) The voltage of a hydrogen electrode at 25ºC was measured as -0.645 V *vs* an SCE reference electrode while immersed in a 0.00100 F solution of a weak acid. At this electrode H_2 was bubbled through the solution into the open atmosphere. Atmospheric pressure was measured as 748.0 mm Hg. The vapour pressure of water at 25ºC is 23.8 mm Hg. (Remember that one standard atmosphere is 760.0 mm Hg pressure.) Calculate the pK_a of the weak acid. Ans: 10.88.

5-31) A Cu(II) sensitive ion selective membrane electrode with an SCE reference electrode is used as the cell in a Cu(II) determination. The voltage of the membrane electrode (*vs* SCE) is +0.031 V in a 0.00100 M Cu(II) solution. The electrode voltage is -0.042 V in an unknown. What is the pCu in the unknown? Assume that the cell response is ideal. Ans: 5.47.

5-32) An electrochemical cell consisting of a Ca^{2+} ion selective electrode and an SCE reference electrode is used to measure $[Ca^{2+}]$ in liquid samples. The voltage of the Ca^{2+} sensitive electrode *vs* the SCE is +0.015 V in a 0.0100M calcium solution. The same measurement gives a voltage of -0.038 V for an unknown. What is the $[Ca^{2+}]$ in the unknown assuming the electrode response is Nernstian (ideal)? Ans: $1.62\text{x}10^{-4}$ M.

5-33) A membrane electrode responsive to cyanide ion produces the following voltages when measured *vs* a reference electrode:

$1.00\text{x}10^{-3}$ M CN^-	+338 mV
$1.00\text{x}10^{-4}$ M CN^-	+390 mV
Unknown	+412 mV

What is the concentration of cyanide ion in the unknown? Ans: $3.78\text{x}10^{-5}$ M.

5-34) A sample containing bromide ion was placed in a cell containing a bromide ISE and the voltage of the ISE was measured as -0.139 V *vs* the reference electrode. 10.0 mL of the sample were mixed with 1.00 mL of a 0.00100 M bromide containing solution and the voltage of the ISE in this solution was

-0.154 V. What is the concentration of Br^- in the sample? Assume Nernstian electrode response. Ans: 1.03×10^{-4} M.

5-35) You are unsure about the ideality of response of a liquid membrane electrode containing an ion carrier responsive to K^+. You therefore make the following measurements: E_{ISE} = 0.1131 V in 0.00800 M KCl, E_{ISE} = 0.0824 V in 0.00200 M KCl. Just before you are to measure your unknown, a fellow student, the infamous Irv Gratch, breaks the reference electrode and ruins the 0.00800 M standard solution. Another reference electrode is found (but you are not sure whether it is the same kind as the one that was broken). The voltage of the ISE in your unknown is 0.0237 V *vs* the new reference and the voltage of a mixture of 10.00 mL of your unknown and 5.00 mL of the 0.00200 M KCl standard is 0.0318 V. What is the concentration of potassium in your unknown? Ans: 8.60×10^{-4} M.